Work Order ID 113096 *113096*

February-12-14 8:22:05 AM

Item ID: D350-748-101 **Accept** *N900040100* **Setup Start** *NS1*

Revision ID: **Stop** *NS2*

Item Name: Fwd Crosstube

Start Date: 3/14/14 **Start Qty:** 1.00 *1* **Cust Item ID:**

Required Date: 3/14/14 **Req'd Qty:** 1.00 *1* **Customer:**

Reference:

Approvals: **Process Plan:** MLJ **Date:** 14-02-13 **Tooling:** _____ **Date:** _____ **Run Start** *NR1*

QC: _____ **Date:** _____ **SPC (Y/N):** _____ **Date:** _____ **Stop** *NR2*

Sequence ID/ Work Center ID	Operation Description	Set Up/ Run Hours	Tool ID	Tool #	Plan Code	Accept Qty	Reject Qty	Reject Number	Insp. Stamp
Draw Nbr	**Revision Nbr**								
D350-748-141	G								
100 *100* DC Document Control	DOCUMENT CONTROL	0.00	DAS 06 9-89	MAY 16 2014					MLJ
	Memo Photocopy bluefile & type labels per PPPD350-748-101 CHG003	0.00							
110 *110* CNC Bend 1 CNC Delta 100 Bender	BENDING MACHINE - CROSSTUBES	0.00							
	Memo Bend tube as per Dwg D350-748-141 using CNC bender program D350F and Folio FT_____	0.00							

****UNDER BEND .225" PER SIDE****

****USE (4) DT9824 SHIM BLOC TO CHECK STRAIGHTNESS****

14-03-20

PTO

DQA: [illegible] Date: 14/06/03

QA Closed: [illegible] Date: 14/5/16

WORK ORDER NON-CONFORMANCE / UPDATE

DART AEROSPACE

Work Order update only ☐

Work Order: 113096

Part No. D350-748-101

NCR No. 14-3874

DISPOSITION

- Rework ☐
- Scrap ☐
- Use-as-is ☒
- Suspected Unapproved ☐

AGAINST DEPARTMENT/PROCESS

- Skid-tube ☐
- Machining ☐
- Thermoforming ☐
- Large Fab ☐
- Crosstube ☒
- Small Fab ☐
- Finishing ☐
- Composite ☐
- Water Jet ☐
- Prod. Eng. Coor. ☐
- Rec/Store/Packaging ☐
- Supplier ☐
- Engineering ☐
- Quality ☐
- Other ☐

Root Cause		Date	Step	Qty	Description of work order update or non-conformance	Initial Chief Eng	Action Description	Sign & Date	Verification	QC Inspector
Design	☐	14/3/25	110	1	Angle & crushing is over tolerance RC Process/Bending.	GP 14/3/25	Acceptable. Location is not critical.	GP 14/3/25	JW 14-03-25	DAS 03 8-99 14-3-25
Doc/Data	☐									
Equip/Tooling	☐									
Handling/Pre	☐									
Material	☐									
Operator	☐									
Offset/Setup	☐									
Process	☒									
Supplier	☐									
Training	☐									
Transport	☐									
Unapproved	☐									

FAULT CATEGORY

Landing Gear

- ☒ Bending
- ☐ Centre Not Concentric
- ☐ Cracks
- ☐ Crimp/Kink/Ripple/Wave
- ☐ Cuffs
- ☐ Crushing
- ☐ Heat Treat
- ☐ Inspection Strip in Tube
- ☐ Marks/Chatter
- ☐ Turning Sequence
- ☐ Wave/Twist in Tube

General

- ☐ Bend
- ☐ BOM/Route
- ☐ Broken/Damage/Defect
- ☐ Burrs
- ☐ Contamination
- ☐ Countersink
- ☐ Cut Too Short
- ☐ Drawing
- ☐ Drill Holes
- ☐ Finish
- ☐ Fit/Function
- ☐ Folio/Program
- ☐ Grain
- ☐ Hardware
- ☐ Inspection Incomplete/Unqualified
- ☐ Instructions Incomplete/Unclear
- ☐ Misaligned/off center
- ☐ Mislabeled
- ☐ Misread
- ☐ Off-set
- ☐ Out of Calibration
- ☐ Out of Sequence
- ☐ Outside Dimensions
- ☐ Over/Under tolerance
- ☐ Part Incorrect
- ☐ Part Lost/Missing
- ☐ Part Moved
- ☐ Positioned Wrong
- ☐ Power Loss/Surge
- ☐ Pressure/Forced
- ☐ Set-up
- ☐ Temperature/Cure
- ☐ Weld
- ☐ Wrong Stock Pulled
- ☐ Other

Work Order ID 113096

February-12-14 8:22:05 AM

113096

Item ID: D350-748-101 **Accept** *N900040100* **Setup Start** *NS1*

Revision ID: **Stop** *NS2*

Item Name: Fwd Crosstube

Start Date: 3/14/14 **Start Qty:** 1.00 *1* **Cust Item ID:**

Required Date: 3/14/14 **Req'd Qty:** 1.00 *1* **Customer:**

Reference:

Approvals: **Process Plan:** _____ **Date:** _____ **Tooling:** _____ **Date:** _____ **Run Start** *NR1*

QC: _____ **Date:** _____ **SPC (Y/N):** _____ **Date:** _____ **Stop** *NR2*

Sequence ID/ Work Center ID	Operation Description	Set Up/ Run Hours	Tool ID	Tool #	Plan Code	Accept Qty	Reject Qty	Reject Number	Insp. Stamp
120		0.00	SHP 14/5/16						
120									
Crosstubes	**Memo**	0.00							
Crosstubes	****VERIFY CROSSTUBE DIMENSIONS AS PER DWG****								
125		0.00							
125						CZ 14/03/21 ①			
Outsource1	**Memo**	0.00							
Outsource process - Heat Treat	ISSUE P/O TO METCOR: 23451								
	Stress relief								
	Heat treat crosstube as per QSI010 4.3 within 12h after bending								
126	Receive & Inspect for Damage & Mat'l Certs	0.00							
126						1X SP 14-3-24			
Packaging	**Memo**	0.00							
Packaging									

DQA: _____ Date: _____

DART AEROSPACE

WORK ORDER NON-CONFORMANCE / UPDATE

QA Closed: Date:

Work Order update only ☐

Work Order: _____

Part No. _____

NCR No. _____

DISPOSITION

- Rework ☐
- Scrap ☐
- Use-as-is ☐
- Suspected Unapproved ☐

AGAINST DEPARTMENT/PROCESS

Skid-tube ☐	Crosstube ☐	Water Jet ☐	Engineering ☐
Machining ☐	Small Fab ☐	Prod. Eng. Coor. ☐	Quality ☐
Thermoforming ☐	Finishing ☐	Rec/Store/Packaging ☐	Other ☐
Large Fab ☐	Composite ☐	Supplier ☐	☐

Root Cause		Date	Step	Qty	Description of work order update or non-conformance	Initial Chief Eng	Action Description	Sign & Date	Verification	QC Inspector
Design	☐									
Doc/Data	☐									
Equip/Tooling	☐									
Handling/Pre	☐									
Material	☐									
Operator	☐									
Offset/Setup	☐									
Process	☐									
Supplier	☐									
Training	☐									
Transport	☐									
Unapproved	☐									

FAULT CATEGORY

Landing Gear

- ☐ Bending
- ☐ Centre Not Concentric
- ☐ Cracks
- ☐ Crimp/Kink/Ripple/Wave
- ☐ Cuffs
- ☐ Crushing
- ☐ Heat Treat
- ☐ Inspection Strip in Tube
- ☐ Marks/Chatter
- ☐ Turning Sequence
- ☐ Wave/Twist in Tube

General

- ☐ Bend
- ☐ BOM/Route
- ☐ Broken/Damage/Defect
- ☐ Burrs
- ☐ Contamination
- ☐ Countersink
- ☐ Cut Too Short
- ☐ Drawing
- ☐ Drill Holes
- ☐ Finish
- ☐ Fit/Function
- ☐ Folio/Program
- ☐ Grain
- ☐ Hardware
- ☐ Inspection Incomplete/Unqualified
- ☐ Instructions Incomplete/Unclear
- ☐ Misaligned/off center
- ☐ Mislabeled
- ☐ Misread
- ☐ Off-set
- ☐ Out of Calibration
- ☐ Out of Sequence
- ☐ Outside Dimensions
- ☐ Over/Under tolerance
- ☐ Part Incorrect
- ☐ Part Lost/Missing
- ☐ Part Moved
- ☐ Positioned Wrong
- ☐ Power Loss/Surge
- ☐ Pressure/Forced
- ☐ Set-up
- ☐ Temperature/Cure
- ☐ Weld
- ☐ Wrong Stock Pulled
- ☐ Other

_____

_____

_____

Work Order ID 113096

113096

February-12-14 8:22:05 AM

Item ID: D350-748-101 **Accept** *N900040100* **Setup Start** *NS1*

Revision ID: **Stop** *NS2*

Item Name: Fwd Crosstube

Start Date: 3/14/14 **Start Qty:** 1.00 *1* **Cust Item ID:**

Required Date: 3/14/14 **Req'd Qty:** 1.00 *1* **Customer:**

Reference:

Run Start *NR1*

Approvals: **Process Plan:** _____ **Date:** _____ **Tooling:** _____ **Date:** _____

Stop *NR2*

QC: _____ **Date:** _____ **SPC (Y/N):** _____ **Date:** _____

Sequence ID/ Work Center ID	Operation Description	Set Up/ Run Hours	Tool ID	Tool #	Plan Code	Accept Qty	Reject Qty	Reject Number	Insp. Stamp
127	QC15- Crosstube Dimensional Check	0.00							
127					DAS 03 9-99		14-3-25		
QC	**Memo**	0.00							
Quality Control	***MARK CUT LINES***								
128		0.00							
128						JW	14-03-26		
Crosstubes	**Memo**	0.00							
Crosstubes	CUT TUBE AT HEIGHT ON FAI SHEET								

VERF HEIGHT 23,375 BY QC 15 LEVEL INSPECTOR _____

VERF TWIST 0.105 BY QC15 LEVEL INSPECTOR _____ 14-3-26

DAS 03 9-99

DQA: _____ Date: _____

DART AEROSPACE

WORK ORDER NON-CONFORMANCE / UPDATE

QA Closed: Date:

Work Order update only ☐

Work Order: _____

Part No. _____

NCR No. _____

DISPOSITION

- Rework ☐
- Scrap ☐
- Use-as-is ☐
- Suspected Unapproved ☐

AGAINST DEPARTMENT/PROCESS

Skid-tube ☐	Crosstube ☐	Water Jet ☐	Engineering ☐
Machining ☐	Small Fab ☐	Prod. Eng. Coor. ☐	Quality ☐
Thermoforming ☐	Finishing ☐	Rec/Store/Packaging ☐	Other ☐
Large Fab ☐	Composite ☐	Supplier ☐	☐

Root Cause		Date	Step	Qty	Description of work order update or non-conformance	Initial Chief Eng	Action Description	Sign & Date	Verification	QC Inspector
Design	☐									
Doc/Data	☐									
Equip/Tooling	☐									
Handling/Pre	☐									
Material	☐									
Operator	☐									
Offset/Setup	☐									
Process	☐									
Supplier	☐									
Training	☐									
Transport	☐									
Unapproved	☐									

FAULT CATEGORY

Landing Gear	General			
☐ Bending	☐ Bend	☐ Folio/Program	☐ Outside Dimensions	☐ Pressure/Forced
☐ Centre Not Concentric	☐ BOM/Route	☐ Grain	☐ Over/Under tolerance	☐ Set-up
☐ Cracks	☐ Broken/Damage/Defect	☐ Hardware	☐ Part Incorrect	☐ Temperature/Cure
☐ Crimp/Kink/Ripple/Wave	☐ Burrs	☐ Inspection Incomplete/Unqualified	☐ Part Lost/Missing	☐ Weld
☐ Cuffs	☐ Contamination	☐ Instructions Incomplete/Unclear	☐ Part Moved	☐ Wrong Stock Pulled
☐ Crushing	☐ Countersink	☐ Misaligned/off center	☐ Positioned Wrong	
☐ Heat Treat	☐ Cut Too Short	☐ Mislabeled	☐ Power Loss/Surge	☐ Other
☐ Inspection Strip in Tube	☐ Drawing	☐ Misread		
☐ Marks/Chatter	☐ Drill Holes	☐ Off-set		
☐ Turning Sequence	☐ Finish	☐ Out of Calibration		
☐ Wave/Twist in Tube	☐ Fit/Function	☐ Out of Sequence		

Work Order ID 113096

113096

February-12-14 8:22:05 AM

Item ID: D350-748-101 **Accept** *N900040100* **Setup Start** *NS1*

Revision ID: **Stop** *NS2*

Item Name: Fwd Crosstube

Start Date: 3/14/14 **Start Qty:** 1.00 *1* **Cust Item ID:**

Required Date: 3/14/14 **Req'd Qty:** 1.00 *1* **Customer:**

Reference:

Run Start *NR1*

Approvals: **Process Plan:** _____ **Date:** _____ **Tooling:** _____ **Date:** _____

Stop *NR2*

QC: _____ **Date:** _____ **SPC (Y/N):** _____ **Date:** _____

Sequence ID/ Work Center ID	Operation Description	Set Up/ Run Hours	Tool ID	Tool #	Plan Code	Accept Qty	Reject Qty	Reject Number	Insp. Stamp
130		0.00							
130	Crosstubes								
Crosstubes	**Memo**	0.00							
Crosstubes									
	2- Drill Tube as per Dwg D350-748-141 Using DT8876 A,B &C Drill Jigs, Set-up drill table as per QSI 010								
	3- Deburr								
	4- Engrave Part # and Batch # as per Dwg D350-748-141								
	5- Remove all marks from tube within limits of D350-748-141								
	6- Apply a light coat of LPS3 on the interior of tube Batch:_____								
140	QC5- Inspect part completeness to step on W/O	0.00	DAS 27 9-89						
140									
QC	**Memo**	0.00							
Quality Control	CHECK 10 DEG HOLES WITH DT8876E (EUROCOPTER CLAMP)								

14-03-31

14-04-01

14/4/d

DART AEROSPACE

DQA: _____ Date: _____

WORK ORDER NON-CONFORMANCE / UPDATE

QA Closed: Date:

Work Order update only ☐

Work Order: _____

Part No. _____

NCR No. _____

DISPOSITION

- Rework ☐
- Scrap ☐
- Use-as-is ☐
- Suspected Unapproved ☐

AGAINST DEPARTMENT/PROCESS

Skid-tube ☐	Crosstube ☐	Water Jet ☐	Engineering ☐
Machining ☐	Small Fab ☐	Prod. Eng. Coor. ☐	Quality ☐
Thermoforming ☐	Finishing ☐	Rec/Store/Packaging ☐	Other ☐
Large Fab ☐	Composite ☐	Supplier ☐	

Root Cause		Date	Step	Qty	Description of work order update or non-conformance	Initial Chief Eng	Action Description	Sign & Date	Verification	QC Inspector
Design	☐									
Doc/Data	☐									
Equip/Tooling	☐									
Handling/Pre	☐									
Material	☐									
Operator	☐									
Offset/Setup	☐									
Process	☐									
Supplier	☐									
Training	☐									
Transport	☐									
Unapproved	☐									

FAULT CATEGORY

Landing Gear

- ☐ Bending
- ☐ Centre Not Concentric
- ☐ Cracks
- ☐ Crimp/Kink/Ripple/Wave
- ☐ Cuffs
- ☐ Crushing
- ☐ Heat Treat
- ☐ Inspection Strip in Tube
- ☐ Marks/Chatter
- ☐ Turning Sequence
- ☐ Wave/Twist in Tube

General

- ☐ Bend
- ☐ BOM/Route
- ☐ Broken/Damage/Defect
- ☐ Burrs
- ☐ Contamination
- ☐ Countersink
- ☐ Cut Too Short
- ☐ Drawing
- ☐ Drill Holes
- ☐ Finish
- ☐ Fit/Function
- ☐ Folio/Program
- ☐ Grain
- ☐ Hardware
- ☐ Inspection Incomplete/Unqualified
- ☐ Instructions Incomplete/Unclear
- ☐ Misaligned/off center
- ☐ Mislabeled
- ☐ Misread
- ☐ Off-set
- ☐ Out of Calibration
- ☐ Out of Sequence
- ☐ Outside Dimensions
- ☐ Over/Under tolerance
- ☐ Part Incorrect
- ☐ Part Lost/Missing
- ☐ Part Moved
- ☐ Positioned Wrong
- ☐ Power Loss/Surge
- ☐ Pressure/Forced
- ☐ Set-up
- ☐ Temperature/Cure
- ☐ Weld
- ☐ Wrong Stock Pulled
- ☐ Other

_____

_____

_____

Work Order ID 113096

113096

February-12-14 8:22:05 AM

Item ID: D350-748-101 **Accept** *N900040100* **Setup Start** *NS1*

Revision ID: **Stop** *NS2*

Item Name: Fwd Crosstube

Start Date: 3/14/14 **Start Qty:** 1.00 *1* **Cust Item ID:**

Required Date: 3/14/14 **Req'd Qty:** 1.00 *1* **Customer:**

Reference:

Run Start *NR1*

Approvals: **Process Plan:** _____ **Date:** _____ **Tooling:** _____ **Date:** _____

Stop *NR2*

QC: _____ **Date:** _____ **SPC (Y/N):** _____ **Date:** _____

Sequence ID/ Work Center ID	Operation Description	Set Up/ Run Hours	Tool ID	Tool #	Plan Code	Accept Qty	Reject Qty	Reject Number	Insp. Stamp
150	Outsource process-Cadplate per QSI017 4.1.9.1	0.00							
150						CL 14/04/02 ①			
Outsource3	**Memo**	0.00							
Outsource process - Cad plate	Issue P/O: 23597 Stress relief at 375° for 5 hours Magnetic Particle Inspect per ASTM E1444 Cadium Plate per AMS-QQ-P-416B, Class 1, Type 2 Embrittle relief at 375° for 8 hours, Chromate Treat Possibe Supplier: Southwest United Industries Ensure Certificate of Conformity is attached								
160	Receive & Inspect for Damage & Mat'l Certs	0.00							
160						[illegible] ①			
Packaging	**Memo**	0.00							
Packaging	Ensure certificate of conformity is attached								
170	QC5- Inspect part completeness to step on W/O	0.00							
170									
QC	**Memo**	0.00							
Quality Control									

8/14/05/07

DART AEROSPACE

DQA: _____ Date: _____

WORK ORDER NON-CONFORMANCE / UPDATE

QA Closed: Date:

Work Order update only ☐

Work Order: _____

Part No. _____

NCR No. _____

DISPOSITION

- Rework ☐
- Scrap ☐
- Use-as-is ☐
- Suspected Unapproved ☐

AGAINST DEPARTMENT/PROCESS

Skid-tube ☐	Crosstube ☐	Water Jet ☐	Engineering ☐
Machining ☐	Small Fab ☐	Prod. Eng. Coor. ☐	Quality ☐
Thermoforming ☐	Finishing ☐	Rec/Store/Packaging ☐	Other ☐
Large Fab ☐	Composite ☐	Supplier ☐	☐

Root Cause		Date	Step	Qty	Description of work order update or non-conformance	Initial Chief Eng	Action Description	Sign & Date	Verification	QC Inspector
Design	☐									
Doc/Data	☐									
Equip/Tooling	☐									
Handling/Pre	☐									
Material	☐									
Operator	☐									
Offset/Setup	☐									
Process	☐									
Supplier	☐									
Training	☐									
Transport	☐									
Unapproved	☐									

FAULT CATEGORY

Landing Gear	General			
☐ Bending	☐ Bend	☐ Folio/Program	☐ Outside Dimensions	☐ Pressure/Forced
☐ Centre Not Concentric	☐ BOM/Route	☐ Grain	☐ Over/Under tolerance	☐ Set-up
☐ Cracks	☐ Broken/Damage/Defect	☐ Hardware	☐ Part Incorrect	☐ Temperature/Cure
☐ Crimp/Kink/Ripple/Wave	☐ Burrs	☐ Inspection Incomplete/Unqualified	☐ Part Lost/Missing	☐ Weld
☐ Cuffs	☐ Contamination	☐ Instructions Incomplete/Unclear	☐ Part Moved	☐ Wrong Stock Pulled
☐ Crushing	☐ Countersink	☐ Misaligned/off center	☐ Positioned Wrong	
☐ Heat Treat	☐ Cut Too Short	☐ Mislabeled	☐ Power Loss/Surge	☐ Other
☐ Inspection Strip in Tube	☐ Drawing	☐ Misread		
☐ Marks/Chatter	☐ Drill Holes	☐ Off-set		
☐ Turning Sequence	☐ Finish	☐ Out of Calibration		
☐ Wave/Twist in Tube	☐ Fit/Function	☐ Out of Sequence		

Item ID: D350-748-101 **Accept** *N900040100* **Setup Start** *NS1*
Revision ID: **Stop** *NS2*
Item Name: Fwd Crosstube

Start Date: 3/14/14 **Start Qty:** 1.00 *1* **Cust Item ID:**
Required Date: 3/14/14 **Req'd Qty:** 1.00 *1* **Customer:**
Reference:

Run Start *NR1*
Stop *NR2*

Approvals: **Process Plan:** _____ **Date:** _____ **Tooling:** _____ **Date:** _____
QC: _____ **Date:** _____ **SPC (Y/N):** _____ **Date:** _____

Sequence ID/ Work Center ID	Operation Description	Set Up/ Run Hours	Tool ID	Tool #	Plan Code	Accept Qty	Reject Qty	Reject Number	Insp. Stamp
174	Outsource process - NDT per QSI038 4.1	0.00							
174						CL 14/05/12 (1)			
Outsource2	**Memo**	0.00							
Outsource process - NDT	ISSUE P/O TO ACUREN: 24178								
176	Receive & Inspect for Damage & Mat'l Certs	0.00							
176						14/6/12 (1)			
Packaging	**Memo**	0.00							
Packaging									
178	QC5- Inspect part completeness to step on W/O	0.00	DAS 27 9-59 14/5/13						
178									
QC	**Memo**	0.00							
Quality Control									

DQA: _____ Date: _____

WORK ORDER NON-CONFORMANCE / UPDATE

DART AEROSPACE

QA Closed: Date:

Work Order update only ☐

Work Order: _____

Part No. _____

NCR No. _____

DISPOSITION

- Rework ☐
- Scrap ☐
- Use-as-is ☐
- Suspected Unapproved ☐

AGAINST DEPARTMENT/PROCESS

Skid-tube ☐	Crosstube ☐	Water Jet ☐	Engineering ☐
Machining ☐	Small Fab ☐	Prod. Eng. Coor. ☐	Quality ☐
Thermoforming ☐	Finishing ☐	Rec/Store/Packaging ☐	Other ☐
Large Fab ☐	Composite ☐	Supplier ☐	☐

Root Cause		Date	Step	Qty	Description of work order update or non-conformance	Initial Chief Eng	Action Description	Sign & Date	Verification	QC Inspector
Design	☐									
Doc/Data	☐									
Equip/Tooling	☐									
Handling/Pre	☐									
Material	☐									
Operator	☐									
Offset/Setup	☐									
Process	☐									
Supplier	☐									
Training	☐									
Transport	☐									
Unapproved	☐									

FAULT CATEGORY

Landing Gear

- ☐ Bending
- ☐ Centre Not Concentric
- ☐ Cracks
- ☐ Crimp/Kink/Ripple/Wave
- ☐ Cuffs
- ☐ Crushing
- ☐ Heat Treat
- ☐ Inspection Strip in Tube
- ☐ Marks/Chatter
- ☐ Turning Sequence
- ☐ Wave/Twist in Tube

General

- ☐ Bend
- ☐ BOM/Route
- ☐ Broken/Damage/Defect
- ☐ Burrs
- ☐ Contamination
- ☐ Countersink
- ☐ Cut Too Short
- ☐ Drawing
- ☐ Drill Holes
- ☐ Finish
- ☐ Fit/Function
- ☐ Folio/Program
- ☐ Grain
- ☐ Hardware
- ☐ Inspection Incomplete/Unqualified
- ☐ Instructions Incomplete/Unclear
- ☐ Misaligned/off center
- ☐ Mislabeled
- ☐ Misread
- ☐ Off-set
- ☐ Out of Calibration
- ☐ Out of Sequence
- ☐ Outside Dimensions
- ☐ Over/Under tolerance
- ☐ Part Incorrect
- ☐ Part Lost/Missing
- ☐ Part Moved
- ☐ Positioned Wrong
- ☐ Power Loss/Surge
- ☐ Pressure/Forced
- ☐ Set-up
- ☐ Temperature/Cure
- ☐ Weld
- ☐ Wrong Stock Pulled
- ☐ Other

_____

_____

_____

Item ID: D350-748-101 **Accept** *N900040100* **Setup Start** *NS1*
Revision ID: **Stop** *NS2*
Item Name: Fwd Crosstube
Start Date: 3/14/14 **Start Qty:** 1.00 *1* **Cust Item ID:**
Required Date: 3/14/14 **Req'd Qty:** 1.00 *1* **Customer:**
Reference:

Approvals: **Process Plan:** _____ **Date:** _____ **Tooling:** _____ **Date:** _____ **Run Start** *NR1*
QC: _____ **Date:** _____ **SPC (Y/N):** _____ **Date:** _____ **Stop** *NR2*

Sequence ID/ Work Center ID	Operation Description	Set Up/ Run Hours	Tool ID	Tool #	Plan Code	Accept Qty	Reject Qty	Reject Number	Insp. Stamp
180		0.00							
180 SprayPaint	SprayPaint					1		CR 14-05-12	
	Memo	0.00							
Spray Painting	1-Prime inside crosstube as per QSI 005 4.2 BATCH: 128826 2-Prime Outside of Tube as per Dart QSI 005 4.2 BATCH: 128826 Spray paint white Imron B: m128840 Start: 3:00 finish: 4:00								
190	QC14- Inspect Spray Paint	0.00							
190 QC									
	Memo	0.00							
Quality Control	Then,Wrap in plastic bag to protect from scratches								

DAS
27
~~9-89~~
14/5/13

DQA: _____ Date: _____

WORK ORDER NON-CONFORMANCE / UPDATE

DART AEROSPACE

QA Closed: Date:

Work Order update only ☐

Work Order: _____

Part No. _____

NCR No. _____

DISPOSITION

- Rework ☐
- Scrap ☐
- Use-as-is ☐
- Suspected Unapproved ☐

AGAINST DEPARTMENT/PROCESS

Skid-tube ☐	Crosstube ☐	Water Jet ☐	Engineering ☐
Machining ☐	Small Fab ☐	Prod. Eng. Coor. ☐	Quality ☐
Thermoforming ☐	Finishing ☐	Rec/Store/Packaging ☐	Other ☐
Large Fab ☐	Composite ☐	Supplier ☐	☐

Root Cause		Date	Step	Qty	Description of work order update or non-conformance	Initial Chief Eng	Action Description	Sign & Date	Verification	QC Inspector
Design	☐									
Doc/Data	☐									
Equip/Tooling	☐									
Handling/Pre	☐									
Material	☐									
Operator	☐									
Offset/Setup	☐									
Process	☐									
Supplier	☐									
Training	☐									
Transport	☐									
Unapproved	☐									

FAULT CATEGORY

Landing Gear

- ☐ Bending
- ☐ Centre Not Concentric
- ☐ Cracks
- ☐ Crimp/Kink/Ripple/Wave
- ☐ Cuffs
- ☐ Crushing
- ☐ Heat Treat
- ☐ Inspection Strip in Tube
- ☐ Marks/Chatter
- ☐ Turning Sequence
- ☐ Wave/Twist in Tube

General

- ☐ Bend
- ☐ BOM/Route
- ☐ Broken/Damage/Defect
- ☐ Burrs
- ☐ Contamination
- ☐ Countersink
- ☐ Cut Too Short
- ☐ Drawing
- ☐ Drill Holes
- ☐ Finish
- ☐ Fit/Function
- ☐ Folio/Program
- ☐ Grain
- ☐ Hardware
- ☐ Inspection Incomplete/Unqualified
- ☐ Instructions Incomplete/Unclear
- ☐ Misaligned/off center
- ☐ Mislabeled
- ☐ Misread
- ☐ Off-set
- ☐ Out of Calibration
- ☐ Out of Sequence
- ☐ Outside Dimensions
- ☐ Over/Under tolerance
- ☐ Part Incorrect
- ☐ Part Lost/Missing
- ☐ Part Moved
- ☐ Positioned Wrong
- ☐ Power Loss/Surge
- ☐ Pressure/Forced
- ☐ Set-up
- ☐ Temperature/Cure
- ☐ Weld
- ☐ Wrong Stock Pulled
- ☐ Other

_____

_____

_____

Item ID: D350-748-101 **Accept** *N900040100* **Setup Start** *NS1*
Revision ID: **Stop** *NS2*
Item Name: Fwd Crosstube

Start Date: 3/14/14 **Start Qty:** 1.00 *1* **Cust Item ID:**
Required Date: 3/14/14 **Req'd Qty:** 1.00 *1* **Customer:**
Reference:

Approvals: **Process Plan:** _____ **Date:** _____ **Tooling:** _____ **Date:** _____ **Run Start** *NR1*
QC: _____ **Date:** _____ **SPC (Y/N):** _____ **Date:** _____ **Stop** *NR2*

Sequence ID/ Work Center ID	Operation Description	Set Up/ Run Hours	Tool ID	Tool #	Plan Code	Accept Qty	Reject Qty	Reject Number	Insp. Stamp
200		0.00							
200 Crosstubes	Crosstubes					1	ø	ø	AR 14-5-13
Crosstubes	**Memo**	0.00							

INSTALL GROUND WIRE INSERT, THEN INSERT SCREW AND WASHER

1-Abrade mating surfaces of support and crosstube with 180 grit sandpaper, clean the area with MEK or equivalent as per dwg

2-Install supports with Proseal 890 per D350-748-141 and QSI 015
A/R Proseal 890 Batch: 128712
EXP: 10/14

3-Install supports clamps Using Dt8876 as per Dwg D350-748-141,Torque to 60-80 IN-LBS.
PROSEAL CURE TIME 72 HOURS:
Start: 14-5-13
Finish: 14-5-16

RE-CHECK TORCQUE ON CLAMP AFTER PROSEAL HAS CURED FOR 72HOURS AS PER DWG.

DQA: _____ Date: _____

WORK ORDER NON-CONFORMANCE / UPDATE

DART AEROSPACE

QA Closed: Date: Work Order update only ☐

Work Order: _____

Part No. _____

NCR No. _____

DISPOSITION

- Rework ☐
- Scrap ☐
- Use-as-is ☐
- Suspected Unapproved ☐

AGAINST DEPARTMENT/PROCESS

Skid-tube ☐	Crosstube ☐	Water Jet ☐	Engineering ☐
Machining ☐	Small Fab ☐	Prod. Eng. Coor. ☐	Quality ☐
Thermoforming ☐	Finishing ☐	Rec/Store/Packaging ☐	Other ☐
Large Fab ☐	Composite ☐	Supplier ☐	☐

Root Cause		Date	Step	Qty	Description of work order update or non-conformance	Initial Chief Eng	Action Description	Sign & Date	Verification	QC Inspector
Design	☐									
Doc/Data	☐									
Equip/Tooling	☐									
Handling/Pre	☐									
Material	☐									
Operator	☐									
Offset/Setup	☐									
Process	☐									
Supplier	☐									
Training	☐									
Transport	☐									
Unapproved	☐									

FAULT CATEGORY

Landing Gear

- ☐ Bending
- ☐ Centre Not Concentric
- ☐ Cracks
- ☐ Crimp/Kink/Ripple/Wave
- ☐ Cuffs
- ☐ Crushing
- ☐ Heat Treat
- ☐ Inspection Strip in Tube
- ☐ Marks/Chatter
- ☐ Turning Sequence
- ☐ Wave/Twist in Tube

General

- ☐ Bend
- ☐ BOM/Route
- ☐ Broken/Damage/Defect
- ☐ Burrs
- ☐ Contamination
- ☐ Countersink
- ☐ Cut Too Short
- ☐ Drawing
- ☐ Drill Holes
- ☐ Finish
- ☐ Fit/Function
- ☐ Folio/Program
- ☐ Grain
- ☐ Hardware
- ☐ Inspection Incomplete/Unqualified
- ☐ Instructions Incomplete/Unclear
- ☐ Misaligned/off center
- ☐ Mislabeled
- ☐ Misread
- ☐ Off-set
- ☐ Out of Calibration
- ☐ Out of Sequence
- ☐ Outside Dimensions
- ☐ Over/Under tolerance
- ☐ Part Incorrect
- ☐ Part Lost/Missing
- ☐ Part Moved
- ☐ Positioned Wrong
- ☐ Power Loss/Surge
- ☐ Pressure/Forced
- ☐ Set-up
- ☐ Temperature/Cure
- ☐ Weld
- ☐ Wrong Stock Pulled
- ☐ Other

_____

_____

_____

Work Order ID 113096

113096

February-12-14 8:22:05 AM

Item ID: D350-748-101 **Accept** *N900040100* **Setup Start** *NS1*

Revision ID: **Stop** *NS2*

Item Name: Fwd Crosstube

Start Date: 3/14/14 **Start Qty:** 1.00 *1* **Cust Item ID:**

Required Date: 3/14/14 **Req'd Qty:** 1.00 *1* **Customer:**

Reference:

Approvals: **Process Plan:** _____ **Date:** _____ **Tooling:** _____ **Date:** _____ **Run Start** *NR1*

QC: _____ **Date:** _____ **SPC (Y/N):** _____ **Date:** _____ **Stop** *NR2*

Sequence ID/ Work Center ID	Operation Description	Set Up/ Run Hours	Tool ID	Tool #	Plan Code	Accept Qty	Reject Qty	Reject Number	Insp. Stamp
210	QC5- Inspect part completeness to step on W/O	0.00							
210 QC Quality Control	Memo	0.00							
	RE-CHECK TORCQUE ON CLAMP AFTER PROSEAL HAS CURED FOR 72HOURS AS PER DWG.								
220	Pick Kit	0.00							
220 Packaging Packaging	Memo	0.00				1X		14-5-16	
230	QC4- 100% Inspect kits for completeness	0.00							
230 QC Quality Control	Memo	0.00							

DAS 26 9-89

DAS 28 9-89

DAS 06 9-89

MAY 16 2014

DQA: _____ Date: _____

WORK ORDER NON-CONFORMANCE / UPDATE

DART AEROSPACE

QA Closed: Date:

Work Order update only ☐

Work Order: _____

Part No. _____

NCR No. _____

DISPOSITION

- Rework ☐
- Scrap ☐
- Use-as-is ☐
- Suspected Unapproved ☐

AGAINST DEPARTMENT/PROCESS

Skid-tube ☐	Crosstube ☐	Water Jet ☐	Engineering ☐
Machining ☐	Small Fab ☐	Prod. Eng. Coor. ☐	Quality ☐
Thermoforming ☐	Finishing ☐	Rec/Store/Packaging ☐	Other ☐
Large Fab ☐	Composite ☐	Supplier ☐	

Root Cause		Date	Step	Qty	Description of work order update or non-conformance	Initial Chief Eng	Action Description	Sign & Date	Verification	QC Inspector
Design	☐									
Doc/Data	☐									
Equip/Tooling	☐									
Handling/Pre	☐									
Material	☐									
Operator	☐									
Offset/Setup	☐									
Process	☐									
Supplier	☐									
Training	☐									
Transport	☐									
Unapproved	☐									

FAULT CATEGORY

Landing Gear

- ☐ Bending
- ☐ Centre Not Concentric
- ☐ Cracks
- ☐ Crimp/Kink/Ripple/Wave
- ☐ Cuffs
- ☐ Crushing
- ☐ Heat Treat
- ☐ Inspection Strip in Tube
- ☐ Marks/Chatter
- ☐ Turning Sequence
- ☐ Wave/Twist in Tube

General

- ☐ Bend
- ☐ BOM/Route
- ☐ Broken/Damage/Defect
- ☐ Burrs
- ☐ Contamination
- ☐ Countersink
- ☐ Cut Too Short
- ☐ Drawing
- ☐ Drill Holes
- ☐ Finish
- ☐ Fit/Function
- ☐ Folio/Program
- ☐ Grain
- ☐ Hardware
- ☐ Inspection Incomplete/Unqualified
- ☐ Instructions Incomplete/Unclear
- ☐ Misaligned/off center
- ☐ Mislabeled
- ☐ Misread
- ☐ Off-set
- ☐ Out of Calibration
- ☐ Out of Sequence
- ☐ Outside Dimensions
- ☐ Over/Under tolerance
- ☐ Part Incorrect
- ☐ Part Lost/Missing
- ☐ Part Moved
- ☐ Positioned Wrong
- ☐ Power Loss/Surge
- ☐ Pressure/Forced
- ☐ Set-up
- ☐ Temperature/Cure
- ☐ Weld
- ☐ Wrong Stock Pulled
- ☐ Other

_____

_____

_____

Work Order ID 113096

February-12-14 8:22:05 AM

113096

Item ID: D350-748-101 **Accept** *N900040100* **Setup Start** *NS1*

Revision ID: **Stop** *NS2*

Item Name: Fwd Crosstube

Start Date: 3/14/14 **Start Qty:** 1.00 *1* **Cust Item ID:**

Required Date: 3/14/14 **Req'd Qty:** 1.00 *1* **Customer:**

Reference:

Run Start *NR1*

Stop *NR2*

Approvals: **Process Plan:** _____ **Date:** _____ **Tooling:** _____ **Date:** _____

QC: _____ **Date:** _____ **SPC (Y/N):** _____ **Date:** _____

Sequence ID/ Work Center ID	Operation Description	Set Up/ Run Hours	Tool ID	Tool #	Plan Code	Accept Qty	Reject Qty	Reject Number	Insp. Stamp
240		0.00							
240	Packaging								
Packaging	**Memo**	0.00	DAS 06 9-89			MAY 16 2014		DAS 28 9-89	
Packaging	Identify and pack for shipping as per PPP D350-748-101 Location:_____ PPP Rev:_____								
250	QC21- Final Inspection - Work Order Release	0.00					14/5/16		
250									
QC	**Memo**	0.00							
Quality Control									

14-5-16

DART AEROSPACE

DQA: _____ Date: _____

WORK ORDER NON-CONFORMANCE / UPDATE

QA Closed: Date:

Work Order update only ☐

Work Order: _____

Part No. _____

NCR No. _____

DISPOSITION

- Rework ☐
- Scrap ☐
- Use-as-is ☐
- Suspected Unapproved ☐

AGAINST DEPARTMENT/PROCESS

Skid-tube ☐	Crosstube ☐	Water Jet ☐	Engineering ☐
Machining ☐	Small Fab ☐	Prod. Eng. Coor. ☐	Quality ☐
Thermoforming ☐	Finishing ☐	Rec/Store/Packaging ☐	Other ☐
Large Fab ☐	Composite ☐	Supplier ☐	☐

Root Cause		Date	Step	Qty	Description of work order update or non-conformance	Initial Chief Eng	Action Description	Sign & Date	Verification	QC Inspector
Design	☐									
Doc/Data	☐									
Equip/Tooling	☐									
Handling/Pre	☐									
Material	☐									
Operator	☐									
Offset/Setup	☐									
Process	☐									
Supplier	☐									
Training	☐									
Transport	☐									
Unapproved	☐									

FAULT CATEGORY

Landing Gear

- ☐ Bending
- ☐ Centre Not Concentric
- ☐ Cracks
- ☐ Crimp/Kink/Ripple/Wave
- ☐ Cuffs
- ☐ Crushing
- ☐ Heat Treat
- ☐ Inspection Strip in Tube
- ☐ Marks/Chatter
- ☐ Turning Sequence
- ☐ Wave/Twist in Tube

General

- ☐ Bend
- ☐ BOM/Route
- ☐ Broken/Damage/Defect
- ☐ Burrs
- ☐ Contamination
- ☐ Countersink
- ☐ Cut Too Short
- ☐ Drawing
- ☐ Drill Holes
- ☐ Finish
- ☐ Fit/Function
- ☐ Folio/Program
- ☐ Grain
- ☐ Hardware
- ☐ Inspection Incomplete/Unqualified
- ☐ Instructions Incomplete/Unclear
- ☐ Misaligned/off center
- ☐ Mislabeled
- ☐ Misread
- ☐ Off-set
- ☐ Out of Calibration
- ☐ Out of Sequence
- ☐ Outside Dimensions
- ☐ Over/Under tolerance
- ☐ Part Incorrect
- ☐ Part Lost/Missing
- ☐ Part Moved
- ☐ Positioned Wrong
- ☐ Power Loss/Surge
- ☐ Pressure/Forced
- ☐ Set-up
- ☐ Temperature/Cure
- ☐ Weld
- ☐ Wrong Stock Pulled
- ☐ Other

_____

_____

_____

Picklist Print

February-12-14 8:22:09 AM

6

Work Order ID: 113096

113096

Parent Item: D350-748-101

D350-748-101

Parent Item Name: Fwd Crosstube

Start Date: 3/14/14 **Required Date:** 3/14/14

Start Qty: 1.00 **Required Qty:** 1.00

Comments:
IPP Rev:A New Issue 06-07-05 JLM
IPP Rev:B Update qty of MS21042L5 06-09-12 KJ VERIFY BY:DD
IPP Rev:C Rev B 07-11-15 DD
IPP Rev D Combined manufacturing 08.04.02 EC verified by: DD
IPP Rev:E 08-06-24 revD as per dwg DD verified by:EC IPP Rev:F 10.08.04 added QSI010 4.3 DD verf:EC
IPP REV:G ADD UNDER BEND COMMENT 12-05-28 JLM IPP REV:H 12.11.05 as per dwg D350-748-141G DD verf:JLM

Component Item ID/ Item Name	Replacement Item ID	Mfg/ Purch	Bin Item	Primary Location	Last Location	Route Seq ID	Unit of Measure	Qty on Hand	Qty per Kit	Total Qty	Qty Issued	Date Issued	Status
AN4-41A		Purchased	No			220	Each	608.0000	8 **	8			
AN4-41A													DAS 26 9-89
Bolt													
DAS 06 9-89												DAS 28 9-89	
				Location			**Loc Qty**		**Loc Code**				
				ST517			608						
					124241		36			8 K			
					124805		387						
					124836		185						
AN4-6A		Purchased	No			220	Each	836.0000	16 **	16			
AN4-6A										14-5-16.			
BOLT										m128634.			
DAS 06 9-89													
				Location			**Loc Qty**		**Loc Code**				
				ST355			47						
					M126317		47						DAS 26 9-89
				ST514			789						
					M126317		539					DAS 28 9-89	
					M127817		250						

DQA: _____ Date: _____

WORK ORDER NON-CONFORMANCE / UPDATE

DART AEROSPACE.

QA Closed: Date: Work Order update only ☐

Work Order: _____

Part No. _____

NCR No. _____

DISPOSITION

- Rework ☐
- Scrap ☐
- Use-as-is ☐
- Suspected Unapproved ☐

AGAINST DEPARTMENT/PROCESS

Skid-tube ☐	Crosstube ☐	Water Jet ☐	Engineering ☐
Machining ☐	Small Fab ☐	Prod. Eng. Coor. ☐	Quality ☐
Thermoforming ☐	Finishing ☐	Rec/Store/Packaging ☐	Other ☐
Large Fab ☐	Composite ☐	Supplier ☐	☐

Root Cause		Date	Step	Qty	Description of work order update or non-conformance	Initial Chief Eng	Action Description	Sign & Date	Verification	QC Inspector
Design	☐									
Doc/Data	☐									
Equip/Tooling	☐									
Handling/Pre	☐									
Material	☐									
Operator	☐									
Offset/Setup	☐									
Process	☐									
Supplier	☐									
Training	☐									
Transport	☐									
Unapproved	☐									

FAULT CATEGORY

Landing Gear	General			
☐ Bending	☐ Bend	☐ Folio/Program	☐ Outside Dimensions	☐ Pressure/Forced
☐ Centre Not Concentric	☐ BOM/Route	☐ Grain	☐ Over/Under tolerance	☐ Set-up
☐ Cracks	☐ Broken/Damage/Defect	☐ Hardware	☐ Part Incorrect	☐ Temperature/Cure
☐ Crimp/Kink/Ripple/Wave	☐ Burrs	☐ Inspection Incomplete/Unqualified	☐ Part Lost/Missing	☐ Weld
☐ Cuffs	☐ Contamination	☐ Instructions Incomplete/Unclear	☐ Part Moved	☐ Wrong Stock Pulled
☐ Crushing	☐ Countersink	☐ Misaligned/off center	☐ Positioned Wrong	
☐ Heat Treat	☐ Cut Too Short	☐ Mislabeled	☐ Power Loss/Surge	☐ Other
☐ Inspection Strip in Tube	☐ Drawing	☐ Misread		
☐ Marks/Chatter	☐ Drill Holes	☐ Off-set		
☐ Turning Sequence	☐ Finish	☐ Out of Calibration		
☐ Wave/Twist in Tube	☐ Fit/Function	☐ Out of Sequence		

Picklist Print

February-12-14 8:22:09 AM

Work Order ID: 113096 *113096*

Parent Item: D350-748-101 *D350-748-101*

Parent Item Name: Fwd Crosstube

Start Date: 3/14/14 **Required Date:** 3/14/14

Start Qty: 1.00 **Required Qty:** 1.00

DAS 26 9-89

AN5-32A | Purchased | No | 220 | Each | 222.0000 | 4 | 4 | **

AN5-32A

Bolt

m128403.

Location	Loc Qty	Loc Code
ST337	192	
124215	188	
m127363	4	
st503	30	
m127550	30	

DAS 28 9-89

DAS 06 9-89

D3500-1 | Manufactured | No | 220 | Each | 65.0000 | 4 | 4 | **

D3500-1

Saddle

~~m128403.~~

DAS 26 9-89

Location	Loc Qty	Loc Code
ST428A	4	
95810	4	
ST430A	42	
108799	40	
94620	2	
ST431	19	
95381	19	

108799

DAS 28 9-89

DAS 06 9-89

D3501-1 | Manufactured | No | 220 | Each | 283.0000 | 16 | 16 | **

D3501-1

Bushing

14-516.

B115846.

Location	Loc Qty	Loc Code
ST043	156	
86913	156	
ST052	127	
105395	87	
105576	40	

DAS 26 9-89

DAS 28 9-89

DAS 06 9-89

DART AEROSPACE

DQA: _____ Date: _____

WORK ORDER NON-CONFORMANCE / UPDATE

QA Closed: Date:

Work Order update only ☐

Work Order: _____

Part No. _____

NCR No. _____

DISPOSITION

- Rework ☐
- Scrap ☐
- Use-as-is ☐
- Suspected Unapproved ☐

AGAINST DEPARTMENT/PROCESS

Skid-tube ☐	Crosstube ☐	Water Jet ☐	Engineering ☐
Machining ☐	Small Fab ☐	Prod. Eng. Coor. ☐	Quality ☐
Thermoforming ☐	Finishing ☐	Rec/Store/Packaging ☐	Other ☐
Large Fab ☐	Composite ☐	Supplier ☐	☐

Root Cause		Date	Step	Qty	Description of work order update or non-conformance	Initial Chief Eng	Action Description	Sign & Date	Verification	QC Inspector
Design	☐									
Doc/Data	☐									
Equip/Tooling	☐									
Handling/Pre	☐									
Material	☐									
Operator	☐									
Offset/Setup	☐									
Process	☐									
Supplier	☐									
Training	☐									
Transport	☐									
Unapproved	☐									

FAULT CATEGORY

Landing Gear

- ☐ Bending
- ☐ Centre Not Concentric
- ☐ Cracks
- ☐ Crimp/Kink/Ripple/Wave
- ☐ Cuffs
- ☐ Crushing
- ☐ Heat Treat
- ☐ Inspection Strip in Tube
- ☐ Marks/Chatter
- ☐ Turning Sequence
- ☐ Wave/Twist in Tube

General

- ☐ Bend
- ☐ BOM/Route
- ☐ Broken/Damage/Defect
- ☐ Burrs
- ☐ Contamination
- ☐ Countersink
- ☐ Cut Too Short
- ☐ Drawing
- ☐ Drill Holes
- ☐ Finish
- ☐ Fit/Function
- ☐ Folio/Program
- ☐ Grain
- ☐ Hardware
- ☐ Inspection Incomplete/Unqualified
- ☐ Instructions Incomplete/Unclear
- ☐ Misaligned/off center
- ☐ Mislabeled
- ☐ Misread
- ☐ Off-set
- ☐ Out of Calibration
- ☐ Out of Sequence
- ☐ Outside Dimensions
- ☐ Over/Under tolerance
- ☐ Part Incorrect
- ☐ Part Lost/Missing
- ☐ Part Moved
- ☐ Positioned Wrong
- ☐ Power Loss/Surge
- ☐ Pressure/Forced
- ☐ Set-up
- ☐ Temperature/Cure
- ☐ Weld
- ☐ Wrong Stock Pulled
- ☐ Other

_____

_____

_____

Picklist Print

February-12-14 8:22:09 AM

Work Order ID: 113096

113096

Parent Item: D350-748-101

D350-748-101

Parent Item Name: Fwd Crosstube

Start Date: 3/14/14 **Required Date:** 3/14/14

Start Qty: 1.00 **Required Qty:** 1.00

MS21042L4 Purchased No 220 Each 3,625.000 24 24 **

MS21042L4

Locknut

m128300 DAS 26 9-89

Location		Loc Qty	Loc Code
GA		48	
	m126333	48	
ST509		3566	
	m127255	1566	
	m127813	2000	
ST518		11	
	m127376	11	

DAS 06 9-89

DAS 28 9-89

MS21042L5 Purchased No 220 Each 1,018.000 4 4 **

MS21042L5

Nut

m128810 DAS 26 9-89

Location		Loc Qty	Loc Code
GA		5	
	117611	5	
ST314		13	
	125535	13	
ST509		1000	
	m127304	500	
	m127813	500	

DAS 06 9-89

DAS 28 9-89

NAS1149D0463J Purchased No 220 Each 5,972.000 32 32 **

NAS1149D0463J

WASHER

145-16 DAS 26 9-89

m128591

Location		Loc Qty	Loc Code
ST294		1572	
	M127693	1572	
ST510a		4400	
	M127813	1400	
	M127904	3000	

DAS 06 9-89

DAS 28 9-89

DQA: _____ Date: _____

WORK ORDER NON-CONFORMANCE / UPDATE

DART AEROSPACE

QA Closed: Date: Work Order update only ☐

Work Order: _____	DISPOSITION	AGAINST DEPARTMENT/PROCESS			
Part No. _____	Rework ☐	Skid-tube ☐	Crosstube ☐	Water Jet ☐	Engineering ☐
	Scrap ☐	Machining ☐	Small Fab ☐	Prod. Eng. Coor. ☐	Quality ☐
	Use-as-is ☐	Thermoforming ☐	Finishing ☐	Rec/Store/Packaging ☐	Other ☐
NCR No. _____	Suspected Unapproved ☐	Large Fab ☐	Composite ☐	Supplier ☐	☐

Root Cause		Date	Step	Qty	Description of work order update or non-conformance	Initial Chief Eng	Action Description	Sign & Date	Verification	QC Inspector
Design	☐									
Doc/Data	☐									
Equip/Tooling	☐									
Handling/Pre	☐									
Material	☐									
Operator	☐									
Offset/Setup	☐									
Process	☐									
Supplier	☐									
Training	☐									
Transport	☐									
Unapproved	☐									

FAULT CATEGORY

Landing Gear	General				
☐ Bending	☐ Bend	☐ Folio/Program	☐ Outside Dimensions	☐ Pressure/Forced
☐ Centre Not Concentric	☐ BOM/Route	☐ Grain	☐ Over/Under tolerance	☐ Set-up
☐ Cracks	☐ Broken/Damage/Defect	☐ Hardware	☐ Part Incorrect	☐ Temperature/Cure
☐ Crimp/Kink/Ripple/Wave	☐ Burrs	☐ Inspection Incomplete/Unqualified	☐ Part Lost/Missing	☐ Weld
☐ Cuffs	☐ Contamination	☐ Instructions Incomplete/Unclear	☐ Part Moved	☐ Wrong Stock Pulled
☐ Crushing	☐ Countersink	☐ Misaligned/off center	☐ Positioned Wrong	
☐ Heat Treat	☐ Cut Too Short	☐ Mislabeled	☐ Power Loss/Surge	☐ Other
☐ Inspection Strip in Tube	☐ Drawing	☐ Misread		
☐ Marks/Chatter	☐ Drill Holes	☐ Off-set		
☐ Turning Sequence	☐ Finish	☐ Out of Calibration		
☐ Wave/Twist in Tube	☐ Fit/Function	☐ Out of Sequence		

Picklist Print

February-12-14 8:22:09 AM

Work Order ID: 113096

113096

Parent Item: D350-748-101

D350-748-101

Parent Item Name: Fwd Crosstube

Start Date: 3/14/14 **Required Date:** 3/14/14

Start Qty: 1.00 **Required Qty:** 1.00

NAS1149D0563J	Purchased	No	220	Each	453.0000	8	8	
NAS1149D0563J						**		14-5-16
Washer								

DAS 06 9-89

Location		Loc Qty	Loc Code
GA		273	
	m125807	273	
ST510a		180	
	m126319	180	

DAS 26 9-89

DAS 28 9-89

8X

D350-748-141TRN	Manufactured	No	110	Each	0.0000	1	1	
D350-748-141TRN		B109692				**		JW 14-05-20
Crosstube Turning Detail								
D3502-1	Manufactured	No	200	Each	79.0000	2	2	
D3502-1						**		AS 14-5-14
Support								

113181

Location		Loc Qty	Loc Code
LG		8	
	110785	8	
LG050		71	
	104334	6	
	110283	13	
	88465	8	
	94722	20	
	97212	12	
	99764	12	

DART AEROSPACE

DQA: _____ Date: _____

WORK ORDER NON-CONFORMANCE / UPDATE

QA Closed: Date:

Work Order update only ☐

Work Order: _____

Part No. _____

NCR No. _____

DISPOSITION

- Rework ☐
- Scrap ☐
- Use-as-is ☐
- Suspected Unapproved ☐

AGAINST DEPARTMENT/PROCESS

Skid-tube ☐	Crosstube ☐	Water Jet ☐	Engineering ☐
Machining ☐	Small Fab ☐	Prod. Eng. Coor. ☐	Quality ☐
Thermoforming ☐	Finishing ☐	Rec/Store/Packaging ☐	Other ☐
Large Fab ☐	Composite ☐	Supplier ☐	☐

Root Cause		Date	Step	Qty	Description of work order update or non-conformance	Initial Chief Eng	Action Description	Sign & Date	Verification	QC Inspector
Design	☐									
Doc/Data	☐									
Equip/Tooling	☐									
Handling/Pre	☐									
Material	☐									
Operator	☐									
Offset/Setup	☐									
Process	☐									
Supplier	☐									
Training	☐									
Transport	☐									
Unapproved	☐									

FAULT CATEGORY

Landing Gear

- ☐ Bending
- ☐ Centre Not Concentric
- ☐ Cracks
- ☐ Crimp/Kink/Ripple/Wave
- ☐ Cuffs
- ☐ Crushing
- ☐ Heat Treat
- ☐ Inspection Strip in Tube
- ☐ Marks/Chatter
- ☐ Turning Sequence
- ☐ Wave/Twist in Tube

General

- ☐ Bend
- ☐ BOM/Route
- ☐ Broken/Damage/Defect
- ☐ Burrs
- ☐ Contamination
- ☐ Countersink
- ☐ Cut Too Short
- ☐ Drawing
- ☐ Drill Holes
- ☐ Finish
- ☐ Fit/Function
- ☐ Folio/Program
- ☐ Grain
- ☐ Hardware
- ☐ Inspection Incomplete/Unqualified
- ☐ Instructions Incomplete/Unclear
- ☐ Misaligned/off center
- ☐ Mislabeled
- ☐ Misread
- ☐ Off-set
- ☐ Out of Calibration
- ☐ Out of Sequence
- ☐ Outside Dimensions
- ☐ Over/Under tolerance
- ☐ Part Incorrect
- ☐ Part Lost/Missing
- ☐ Part Moved
- ☐ Positioned Wrong
- ☐ Power Loss/Surge
- ☐ Pressure/Forced
- ☐ Set-up
- ☐ Temperature/Cure
- ☐ Weld
- ☐ Wrong Stock Pulled
- ☐ Other

_____

_____

_____

Picklist Print

February-12-14 8:22:09 AM

Work Order ID: 113096

113096

Parent Item: D350-748-101

D350-748-101

Parent Item Name: Fwd Crosstube

Start Date: 3/14/14 **Required Date:** 3/14/14

Start Qty: 1.00 **Required Qty:** 1.00

D3595-063-395		Manufactured	No	200	Each	66.0000	2	2	
D3595-063-395							**		Al 14-5-14
Rubber Cushion								②	
ALS4-1032-225	AELS8-1032-225	Purchased	No	200	Each	1,954.000	1	1	
ALS4-1032-225							**		Al 14-5-13
Rivnut									
NAS1149D0363J		Purchased	No	200	Each	2,405.000	1	1	
NAS1149D0363J							**		Al 14-5-13
Washer								①	

D3595-063-395 — 112363

Location	Loc Qty	Loc Code
FG	5	
87353	5	
LG051	61	
105542	21	
108010	20	
109481	20	

ALS4-1032-225 — M128179

Location	Loc Qty	Loc Code
FG	30	
M127028	30	
ST280	1870	
M127028	10	
M128179	1860	
st555	54	
M127092	54	

NAS1149D0363J — 128429

Location	Loc Qty	Loc Code
GA	23	
124392	23	
ST510a	2382	
m126319	1190	
m127813	1192	

DART AEROSPACE

DQA: _____ Date: _____

WORK ORDER NON-CONFORMANCE / UPDATE

QA Closed: Date:

Work Order update only ☐

Work Order: _____

Part No. _____

NCR No. _____

DISPOSITION

- Rework ☐
- Scrap ☐
- Use-as-is ☐
- Suspected Unapproved ☐

AGAINST DEPARTMENT/PROCESS

Skid-tube ☐	Crosstube ☐	Water Jet ☐	Engineering ☐
Machining ☐	Small Fab ☐	Prod. Eng. Coor. ☐	Quality ☐
Thermoforming ☐	Finishing ☐	Rec/Store/Packaging ☐	Other ☐
Large Fab ☐	Composite ☐	Supplier ☐	☐

Root Cause		Date	Step	Qty	Description of work order update or non-conformance	Initial Chief Eng	Action Description	Sign & Date	Verification	QC Inspector
Design	☐									
Doc/Data	☐									
Equip/Tooling	☐									
Handling/Pre	☐									
Material	☐									
Operator	☐									
Offset/Setup	☐									
Process	☐									
Supplier	☐									
Training	☐									
Transport	☐									
Unapproved	☐									

FAULT CATEGORY

Landing Gear

- ☐ Bending
- ☐ Centre Not Concentric
- ☐ Cracks
- ☐ Crimp/Kink/Ripple/Wave
- ☐ Cuffs
- ☐ Crushing
- ☐ Heat Treat
- ☐ Inspection Strip in Tube
- ☐ Marks/Chatter
- ☐ Turning Sequence
- ☐ Wave/Twist in Tube

General

- ☐ Bend
- ☐ BOM/Route
- ☐ Broken/Damage/Defect
- ☐ Burrs
- ☐ Contamination
- ☐ Countersink
- ☐ Cut Too Short
- ☐ Drawing
- ☐ Drill Holes
- ☐ Finish
- ☐ Fit/Function
- ☐ Folio/Program
- ☐ Grain
- ☐ Hardware
- ☐ Inspection Incomplete/Unqualified
- ☐ Instructions Incomplete/Unclear
- ☐ Misaligned/off center
- ☐ Mislabeled
- ☐ Misread
- ☐ Off-set
- ☐ Out of Calibration
- ☐ Out of Sequence
- ☐ Outside Dimensions
- ☐ Over/Under tolerance
- ☐ Part Incorrect
- ☐ Part Lost/Missing
- ☐ Part Moved
- ☐ Positioned Wrong
- ☐ Power Loss/Surge
- ☐ Pressure/Forced
- ☐ Set-up
- ☐ Temperature/Cure
- ☐ Weld
- ☐ Wrong Stock Pulled
- ☐ Other

_____

_____

_____

Picklist Print

February-12-14 8:22:09 AM

Work Order ID: 113096

113096

Parent Item: D350-748-101

D350-748-101

Parent Item Name: Fwd Crosstube

Start Date: 3/14/14 **Required Date:** 3/14/14

Start Qty: 1.00 **Required Qty:** 1.00

MS21920-22	Purchased	No	200	Each	132.0000	2	2	
MS21920-22						**		AR 14-5-14
Clamp								

Location	Loc Qty	Loc Code	
LG050	132		
M127255	40		2
M127608	42		
M128199	50		

MS27039-1-10	Purchased	No	200	Each	584.0000	1	1	
MS27039-1-10						**		AR 14-5-13
SCREW								

Location	Loc Qty	Loc Code	
GA	83		
120449	83		
ST305	1		
m126474	1		
st507	500		
m127993	500		1

DQA: _____ Date: _____

WORK ORDER NON-CONFORMANCE / UPDATE

DART AEROSPACE

QA Closed: Date:

Work Order update only ☐

Work Order: _____	DISPOSITION	AGAINST DEPARTMENT/PROCESS			
Part No. _____	Rework ☐	Skid-tube ☐	Crosstube ☐	Water Jet ☐	Engineering ☐
	Scrap ☐	Machining ☐	Small Fab ☐	Prod. Eng. Coor. ☐	Quality ☐
	Use-as-is ☐	Thermoforming ☐	Finishing ☐	Rec/Store/Packaging ☐	Other ☐
NCR No. _____	Suspected Unapproved ☐	Large Fab ☐	Composite ☐	Supplier ☐	☐

Root Cause		Date	Step	Qty	Description of work order update or non-conformance	Initial Chief Eng	Action Description	Sign & Date	Verification	QC Inspector
Design	☐									
Doc/Data	☐									
Equip/Tooling	☐									
Handling/Pre	☐									
Material	☐									
Operator	☐									
Offset/Setup	☐									
Process	☐									
Supplier	☐									
Training	☐									
Transport	☐									
Unapproved	☐									

FAULT CATEGORY

Landing Gear	General			
☐ Bending	☐ Bend	☐ Folio/Program	☐ Outside Dimensions	☐ Pressure/Forced
☐ Centre Not Concentric	☐ BOM/Route	☐ Grain	☐ Over/Under tolerance	☐ Set-up
☐ Cracks	☐ Broken/Damage/Defect	☐ Hardware	☐ Part Incorrect	☐ Temperature/Cure
☐ Crimp/Kink/Ripple/Wave	☐ Burrs	☐ Inspection Incomplete/Unqualified	☐ Part Lost/Missing	☐ Weld
☐ Cuffs	☐ Contamination	☐ Instructions Incomplete/Unclear	☐ Part Moved	☐ Wrong Stock Pulled
☐ Crushing	☐ Countersink	☐ Misaligned/off center	☐ Positioned Wrong	
☐ Heat Treat	☐ Cut Too Short	☐ Mislabeled	☐ Power Loss/Surge	☐ Other
☐ Inspection Strip in Tube	☐ Drawing	☐ Misread		
☐ Marks/Chatter	☐ Drill Holes	☐ Off-set		
☐ Turning Sequence	☐ Finish	☐ Out of Calibration		
☐ Wave/Twist in Tube	☐ Fit/Function	☐ Out of Sequence		

DART AEROSPACE LTD	Work Order:	113096
Description: Crosstube High Fwd (AS350/355)	**Part Number:**	**D350-748-101**
Inspection Dwg: D350-748-141 **Rev:** G		**Page 1 of 1**

Required Dimension	Min	Max
Height	23.12	23.38
1/2 Span	40.77	41.03
Angle	75	77
Total Span	81.55	82.05
Bending Passes	7	--
Crushing	--	6%
Twist	--	0.25

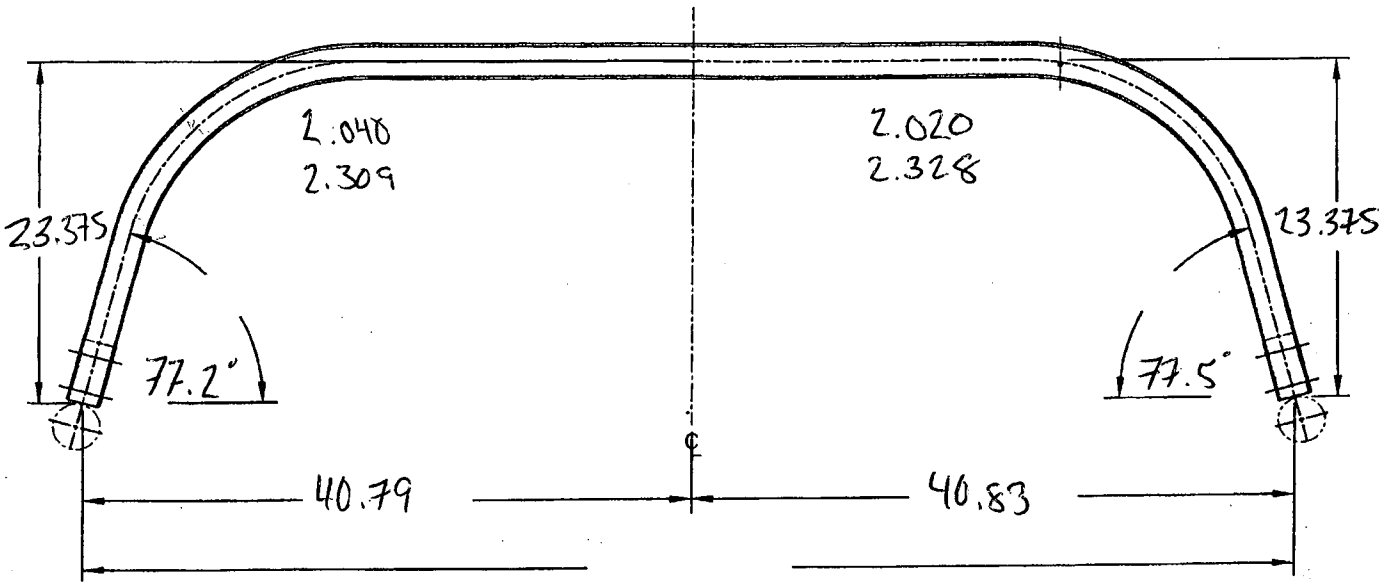

	Side A	Side B
Bending Passes	35	39
Crushing	6.2%	7.1%
Comments		
Rippling = 0.006"/0.015"		

QC15 Inspection	
Date	11-3-25

Rev	Date	Change	Revised by	Approved
A	07.02.06	New Issue	KJ/JM	
B	10.08.23	Dwg Rev updated	KJ	
C	11.11.07	Dwg Rev updated	KJ	
D	12.04.16	Added bending, crushing & twist dimensions	KJ	
E	13.02.27	Dwg Rev updated	KJ	

Item	Qty -141	Part Number	Description
1	X	D350-748-141	**CROSSTUBE ASSEMBLY (AS 350/355 HI FWD)**
2	1	D6015-125	CROSSTUBE (OR D6017-115)
3	2	D3502-1	SUPPORT
G 4	2	D3595-063-395	RUBBER CUSHION
5	1	AELS-1032-225	INSERT
6	1	NAS1149D0363J	WASHER (OR AN960JD10)
7	2	MS21920-22 OR MS 21920-21	CLAMP (PER DART SPEC. M-MS21920-21/-22)
8	1	MS27039-1-10	SCREW
G 9	A/R	PROSEAL 890 B-2	SEALANT, AMS-S-8802 CLASS B-2

GENERAL NOTES:

G 1) MATERIAL: MANUFACTURED FROM D6015-125 OR D6017-115
FINISHED LENGTH AFTER TURNING = 112.270±0.06 (AFTER BENDING/TRIMMING = 110.27 REF)
2) FINISH: MAGNETIC PARTICLE INSPECT PER DART QSI 038 4.2
CADMIUM PLATE PER AMS-QQ-P-416B, CLASS 1, TYPE II
PRIME INSIDE AND OUTSIDE PER DART QSI 005 4.2
PAINT OUTSIDE PER DART QSI 005 4.2
3) TOLERANCE: PER DART QSI 018 UNLESS OTHERWISE NOTED.
G WALL THICKNESS ECCENTRICITY PER DART QSI 038 7.2
MIN. ALLOWABLE WALL IS -0.020 FROM NOMINAL
4) UNITS: INCHES UNLESS OTHERWISE NOTED.
5) BREAK SHARP EDGES: 0.005 TO 0.010 MAX.
6) IDENTIFICATION: DART PART NUMBER "D350-748-141" AND BATCH NUMBER ON INSIDE OF CUFF
PER DART QSI 044 6.4 (VIBRATING STYLUS)
7) WEIGHT: 30.45 lbs
8) PART IS SYMMETRIC ABOUT CENTERLINE. EXCEPT FOR Ø0.297 HOLE.
9) EXTREME CARE MUST BE TAKEN TO PROTECT THE OUTSIDE SURFACE OF THE TUBE. THE OUTSIDE SURFACE MUST BE SMOOTH AND FREE FROM SURFACE DEFECTS SUCH AS SCRATCHES, NICKS, OR DENTS. DEFECTS UP TO 0.005" MAY BE BLENDED OUT LONGITUDINALLY. CIRCUMFERENTIAL GRIND MARKS ARE UNACCEPTABLE. WHEN DRILLING HOLES EXTREME CARE MUST BE TAKEN AND CAREFUL DEBURRING PERFORMED TO ENSURE A CLEAN HOLE WITH NO CRACKING/CHIPPING/GROOVES.

TURNING

10) BLEND OUT ALL EDGES FROM MACHINING LONGITUDINALY, TRANSITION SHOULD BE SMOOTH. NOTE: ALL HOLES ARE DRILLED AFTER BENDING.
11) HEAT TREAT TO MIN. 180 KSI PER MIL-T-6736 OR AMS2759/1E AFTER TURNING. ACCEPTABLE TO VERIFY TENSILE STRENGTH BY HARDNESS TEST PER ASTM E18 TO 40-45 HRC.

BENDING

12) ALL DIMENSIONS FOR BENT TUBE ARE POST STRESS RELIEF
13) BEND PROGRESSIVELY WITH A MINIMUM OF 7 PASSES PER SIDE. MAXIMUM TUBE FLATTENING DUE TO BENDING IS 6% BASED ON O.D. ON TOP HALF OF BEND, AND 7% ON BOTTOM HALF OF BEND.
G 14) MAX AMPLITUDE OF RIPPLING ALONG BENT PORTION OF THE TUBE IS 0.030 (ZN A1-3)
15) AFTER BENDING, STRESS RELIEVE TUBE AT 650ºF +/-0.25ºF FOR A MINIMUM OF 2 HRS AND ALLOW TO COOL TO AMBIENT TEMPERATURE (REF AMS2759/1E).
16) MAX TWIST AFTER STRESS RELIEF: WITH XTUBE LAYED FLAT ON SURFACE, THE DIFFERENCE BETWEEN CUFF HEIGHTS FROM THE SURFACE MAY BE NO LARGER THAN 0.38 (ZN C1-3).

ASSEMBLY

G 17) TO INSTALL D3502-1 SUPPORT: ABRADE MATING SURFACE OF SUPPORT AND CROSSTUBE WITH 180-GRIT SANDPAPER AND REMOVE RESIDUE WITH MEK (OR EQUIVALENT). APPLY A 0.02" TO 0.05" THICK LAYER OF PROSEAL 890 CLASS B-2 (OR AMS-S-8802 CLASS B-2) SEALANT TO MATING SURFACE OF SUPPORT.
G 18) TORQUE CLAMPS 60 TO 80 IN-LB. ENSURE AT LEAST 1.5 THREADS SHOWING IN SAFETY AND THAT NUT HAS NOT BOTTOMED-OUT AFTER TORQUING. **PRIOR TO PACKAGING, RE-CHECK TORQUE ON CLAMPS AFTER PROSEAL 890 SEALANT HAS CURED FOR 72 HOURS.**

NO. 113096.MCJ
14-02-13

RELEASED
2012 -11- 01

REV.	DESCRIPTION	BY	DATE
G	RMV ABRASION STRIP, SUPPORT NOW W/ PROSEAL & CUSHION, ADD STRESS RELIEF, LONGER CUFF, NOW TRIM'D AFTER BEND, ADD WALL DIMS & UPDATE TOL.	CP	12.09.12
F	ADD HRC TEST OPTION (B8-1) PER PAR 09-040, ADD TWIST LIMIT (A8-1, C1-3), ADD D6015-125 OPTION (C8-1), STOCK DIM NOW MACHINED (D1-4)	CP	10.11.23
E	REVISE GENERAL NOTES; UPDATE TO CURRENT ADD STANDARDS; RELOCATED FLAG #6 PER PAR 08-046 (ZN A6-3); TOLERANCES (ZN C6-3, D1-3)	RF	09.09.30
D	MAG. PARTICLE AND CAD PLATE AS MFD.	CP	06.10.31
C	ADD CAD PLATING	CP	06.08.14
B	ADD D6017-115 & PRIME AND PAINT	CP	06.06.30
A	NEW ISSUE	CP	06.03.31

DESIGN		**DART AEROSPACE LTD** HAWKESBURY, ONTARIO, CANADA	
DRAWN			
CHECKED	A.P	DRAWING NO.	REV. G
MFG. APPR.		D350-748-141	SHEET 1 OF 4
APPROVED		TITLE	SCALE
DE APPR.		CROSSTUBE (AS 350/355 HI FWD)	NTS
DATE	12.09.12		

COPYRIGHT © 2006 BY DART AEROSPACE LTD
THIS DOCUMENT IS PRIVATE AND CONFIDENTIAL AND IS SUPPLIED ON THE EXPRESS CONDITION THAT IT IS NOT TO BE USED FOR ANY PURPOSE OR COPIED OR COMMUNICATED TO ANY OTHER PERSON WITHOUT WRITTEN PERMISSION FROM DART AEROSPACE LTD

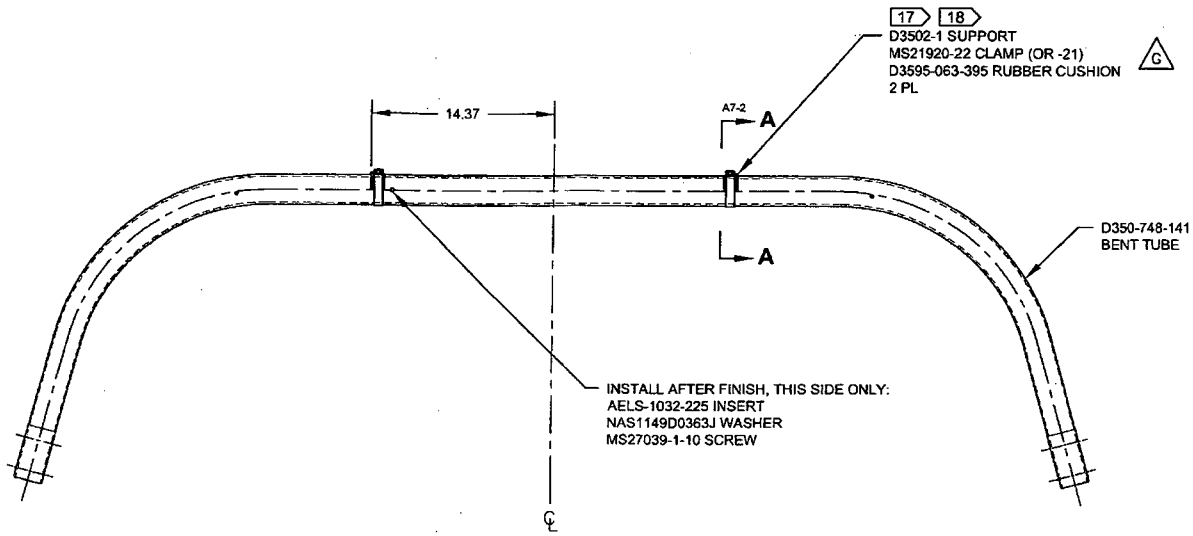

D350-748-141
ASSEMBLY DETAIL

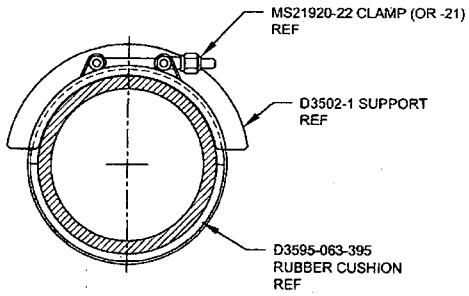

SECTION A-A D4-2
SCALE 6X

RELEASED
2012 -11- 01

DESIGN		**DART AEROSPACE LTD** HAWKESBURY, ONTARIO, CANADA
DRAWN		
CHECKED		DRAWING NO. D350-748-141 — REV. G — SHEET 2 OF 4
MFG. APPR.		
APPROVED		TITLE: CROSSTUBE (AS 350/355 HI FWD) — SCALE: NTS
DE APPR.		
DATE	12.09.12	

COPYRIGHT © 2006 BY DART AEROSPACE LTD
THIS DOCUMENT IS PRIVATE AND CONFIDENTIAL AND IS SUPPLIED ON THE EXPRESS CONDITION THAT IT IS NOT TO BE USED FOR ANY PURPOSE OR COPIED OR COMMUNICATED TO ANY OTHER PERSON WITHOUT WRITTEN PERMISSION FROM DART AEROSPACE LTD.

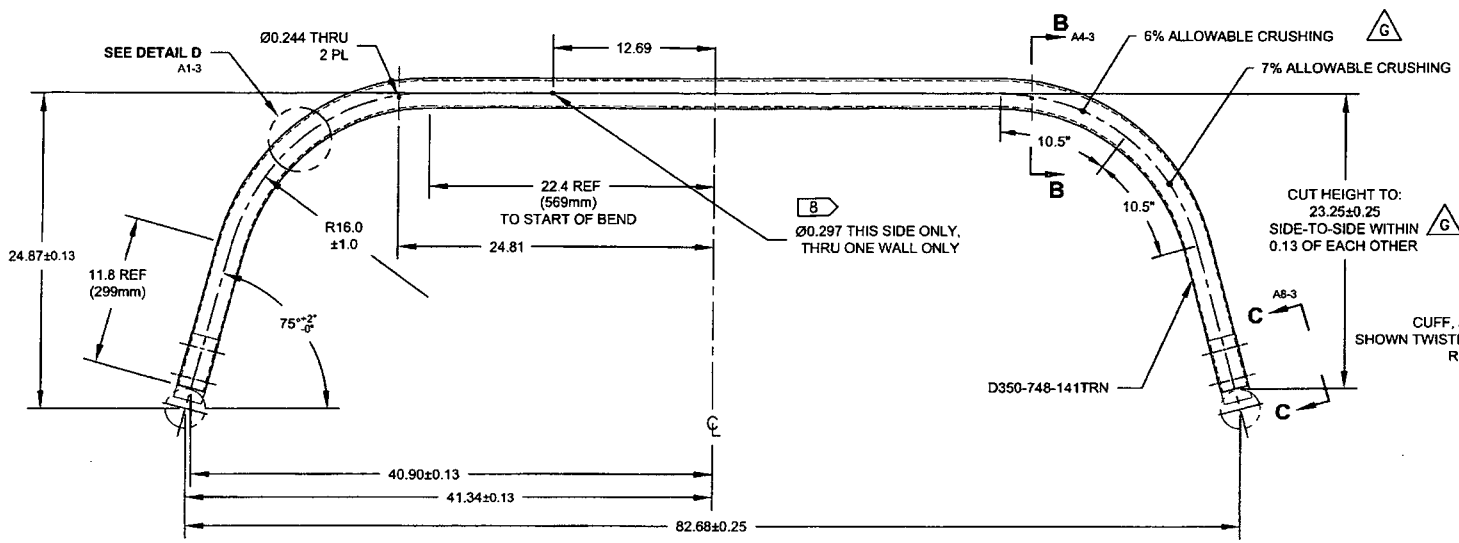

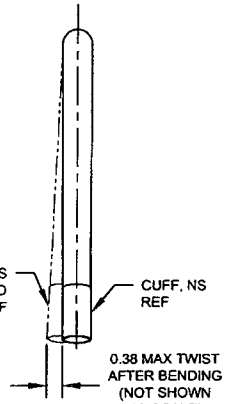

D350-748-141
BENDING AND DRILLING DETAIL 13

RELEASED
2012 -11- 0 1

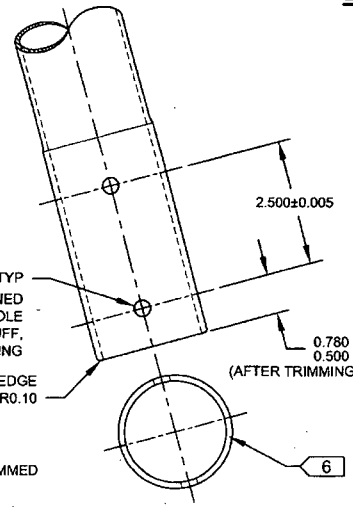

C2-3 **VIEW C-C**
SCALE 4X,
TUBE SHOWN TRIMMED
TO HEIGHT

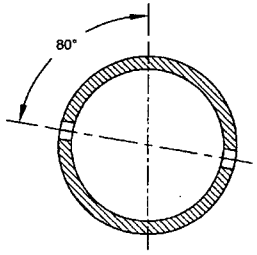

SECTION B-B D3-3
SCALE 6X

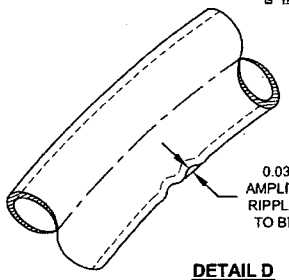

DETAIL D D7-3
SCALE 4X
RIPPLING EXAGGERATED
G

DESIGN		**DART AEROSPACE LTD** HAWKESBURY, ONTARIO, CANADA	
DRAWN			
CHECKED		DRAWING NO.	REV. G
MFG. APPR.		D350-748-141	SHEET 3 OF 4
APPROVED		TITLE	SCALE
DE APPR.		CROSSTUBE (AS 350/355 HI FWD)	NTS
DATE	12.09.12		

COPYRIGHT © 2006 BY DART AEROSPACE LTD
THIS DOCUMENT IS PRIVATE AND CONFIDENTIAL AND IS SUPPLIED ON THE EXPRESS CONDITION THAT IT IS NOT TO BE USED FOR ANY PURPOSE OR COPIED OR COMMUNICATED TO ANY OTHER PERSON WITHOUT WRITTEN PERMISSION FROM DART AEROSPACE LTD.

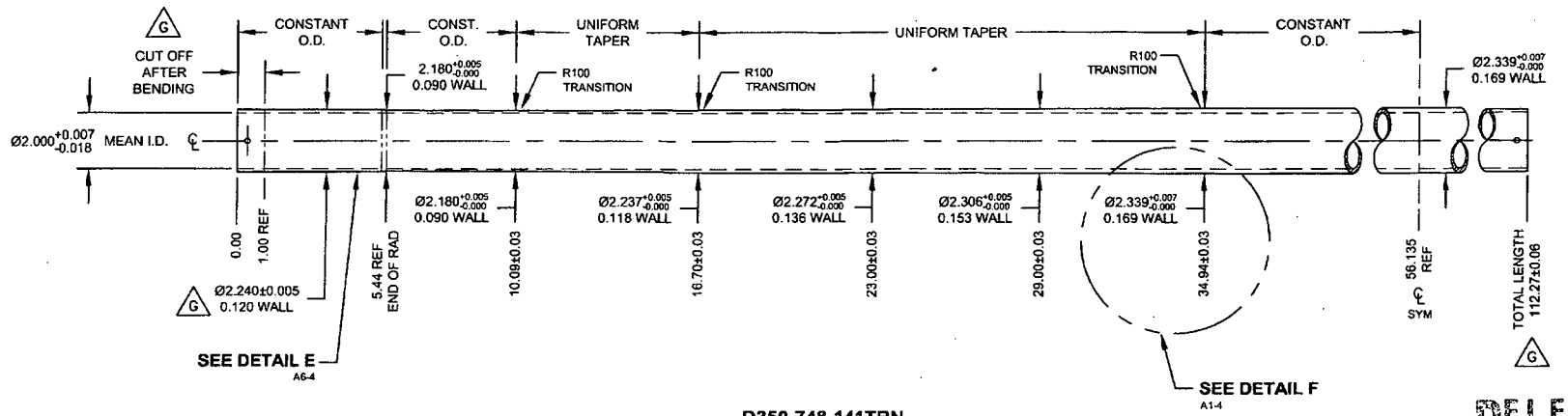

D350-748-141TRN
TURNING DETAIL

RELEASED
2012 -11- 01

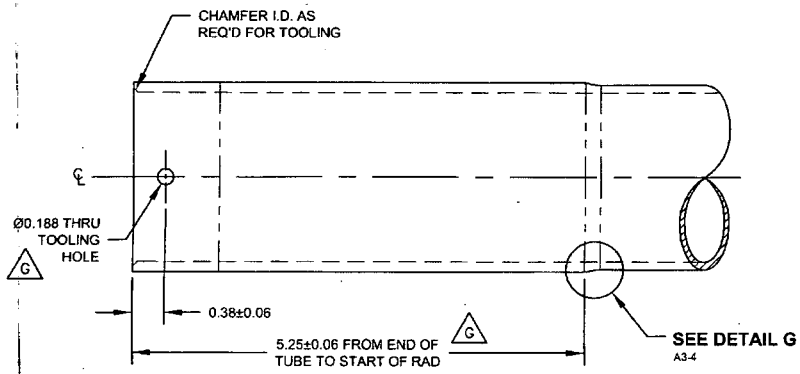

DETAIL E:
CROSSTUBE CUFF C7-4
SCALE 3X

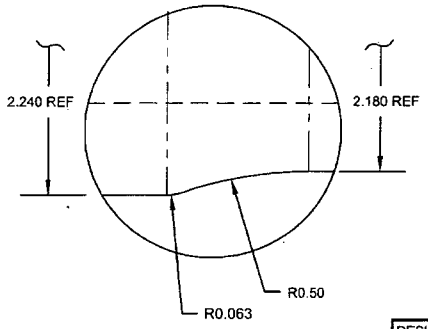

DETAIL G:
CUFF TRANSITION A5-4
NOT TO SCALE

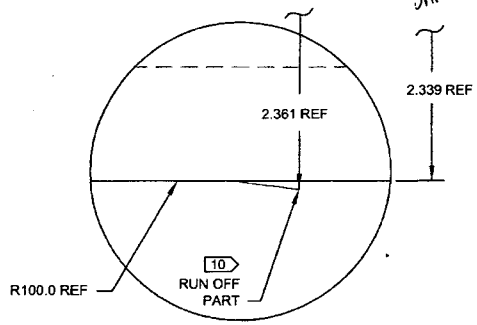

DETAIL F:
TOOL RUN-OFF C3-4
NOT TO SCALE

DESIGN		**DART AEROSPACE LTD** HAWKESBURY, ONTARIO, CANADA	
DRAWN			
CHECKED		DRAWING NO.	REV. G
MFG. APPR.		D350-748-141	SHEET 4 OF 4
APPROVED		TITLE	SCALE
DE APPR.		CROSSTUBE (AS 350/355 HI FWD)	NTS
DATE	12.09.12		

COPYRIGHT © 2006 BY DART AEROSPACE LTD
THIS DOCUMENT IS PRIVATE AND CONFIDENTIAL AND IS SUPPLIED ON THE EXPRESS CONDITION THAT IT IS NOT TO BE USED FOR ANY PURPOSE OR COPIED OR COMMUNICATED TO ANY OTHER PERSON WITHOUT WRITTEN PERMISSION FROM DART AEROSPACE LTD.

DART AEROSPACE LTD	Work Order:	
Description: Crosstube High Fwd (AS350/355)	Part Number:	D350-748-101
Inspection Dwg: D350-748-141 Rev: G		Page 1 of 1

Required Dimension	Min	Max
Height	23.12	23.38
1/2 Span	40.77	41.03
Angle	75	77
Total Span	81.55	82.05
Bending Passes	7	--
Crushing	--	6%
Twist	--	0.25

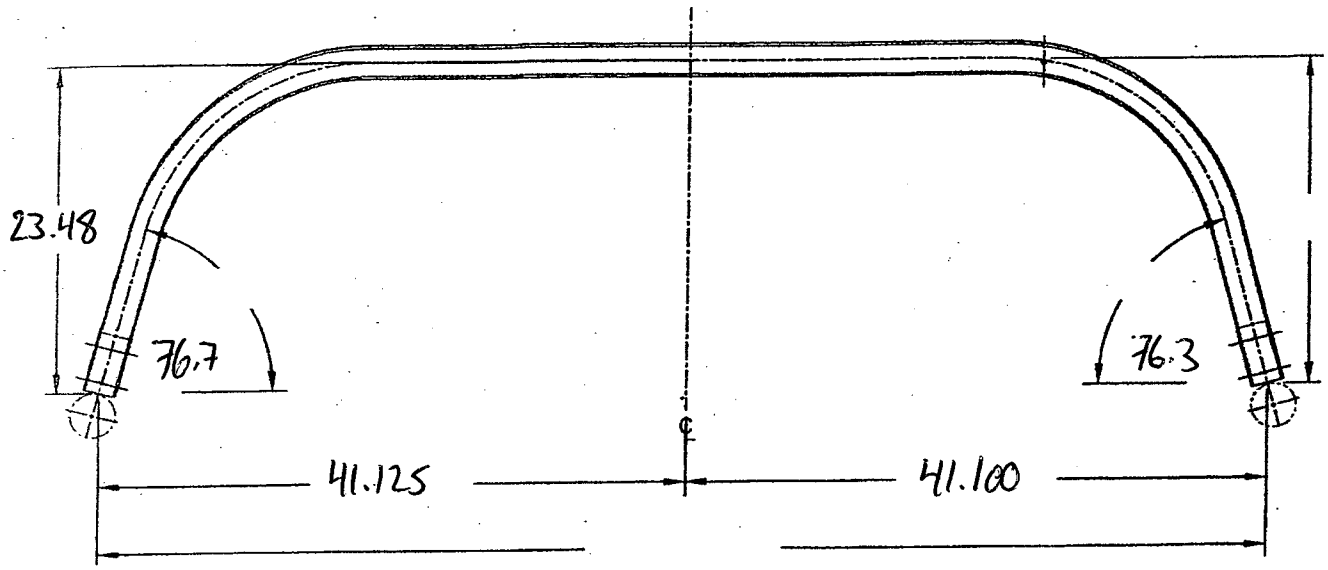

	Side A	Side B
Bending Passes		
Crushing		
Comments		
twist = 0.036		

QC15 Inspection	
Date	

Rev	Date	Change	Revised by	Approved
A	07.02.06	New Issue	KJ/JM	
B	10.08.23	Dwg Rev updated	KJ	
C	11.11.07	Dwg Rev updated	KJ	
D	12.04.16	Added bending, crushing & twist dimensions	KJ	
E	13.02.27	Dwg Rev updated	KJ	

METCOR INC.

560 BOUL. ARTHUR-SAUVÉ
ST-EUSTACHE, QC J7R 5A8
Tel: 450-473-1884 / Fax: 450-491-5498

Reçu de livraison

Delivery Receipt

BON DE TRAVAIL Order	EXPÉDITEUR Shipper ID	BON D'EXPÉDITION Shipper
194329	1	79898

EXPÉDITION COMPLÈTE / Shipped Complete

CLIENT /Customer 215

DART AEROSPACE
1270 ABERDEEN
HAWKESBURY, ON K6A 1K7
Ph: 613-632-5200
Fax: 613-632-1053

LIVRÉ À /Shipped To

DART AEROSPACE
1270 ABERDEEN
HAWKESBURY, ON K6A 1K7
Ph: 613-632-5200
Fax: 613-632-1053

COMMANDE DU CLIENT Customer PO	BON DE LIVRAISON DU CLIENT Customer Shipper No.	TYPE DE MATÉRIEL Material Type	DATE DE LA COMMANDE Order Date	TRANSPORTEUR Carrier
23451		STEEL	2014/3/20	CLIENT

QUANTITÉ Quantity	No. PIÈCE / Part No.	NOM DE LA PIÈCE / Part Name	DESCRIPTION DE LA PIÈCE Part Description	POIDS Weight
4	D350-748-101	CROSSTUBE		120,
	(1) D350-748-101	CROSSTUBE		
	113100			
	(1) D350-748-101 / 114235			
	(1) D350-748-101 / 113096			
	(1) D350-748-101 / 113095			
1	NIL			

SP 14-3-24

TYPE DE CONTENEUR Container Type	# DE CONTENEURS # Of Containers	COMMENTAIRES CONTENEUR Container Comments
NIL	1	

EMPAQUETAGE Packing	

QUANTITÉ EXPÉDIÉE / Quantity Shipped :	4
POIDS EXPÉDIÉ / Weight Shipped :	120,00
QUANTITÉ RESTANTE / Quantity Remaining :	0
POIDS RESTANT / Weight Remaining :	0,00

QUANTITÉ EXPÉDIÉE /Quantity Shipped:	4
POIDS EXPÉDIÉ / Weight Shipped :	120,00

Signature: **Date:**

EXPÉDIÉ LE / Shipped On : **2014/03/21**

F-050-06 Rev. B

Metcor Inc.
560, boul. Arthur-Sauvé, St-Eustache (Québec) J7R 5A8
Tél.: 450 473-1884
Télécopieur/Fax administration 450 491-5498
Télécopieur/Fax production 450 491-6454

METCOR INC.
560 BOUL. ARTHUR-SAUVÉ, ST-EUSTACHE, QC, J7R 5A8
Tél.: 450-473-1884
Télécopieur / Fax administration: 450-491-5498
Télécopieur / Fax production: 450 491-6454

Rapport d'Inspection
Inspection Report

BON DE TRAVAIL order	CHARGEMENT load
194329	1

CLIENT / customer 215
DART AEROSPACE
1270 ABERDEEN
HAWKESBURY ON K6A 1K7

LIVRÉ À / shipped to: 1
DART AEROSPACE
1270 ABERDEEN
HAWKESBURY ON K6A 1K7

COMMANDE DU CLIENT customer po	BON DE LIVRAISON DU CLIENT customer shipper no.	MATÉRIEL material	CODE DE TRAITEMENT mat'l heat code	NUMÉRO DE LOT lot number
23451				

SPÉCIFICATIONS DU PROCÉDÉ
processing specifications

STRESS REL

SAE AMS 2759/1 REV.E

EXIGENCE / requirement	SPÉCIFICATIONS / specified	TESTS EXÉCUTÉS / performed	RÉSULTATS DE TESTS / results
Visual			

QUANTITÉ quantity	POIDS weight	DESCRIPTION DES PIÈCES parts description
4	120	D350-748-101 CROSSTUBE (1) D350-748-101 CROSSTUBE 113100 (1) D350-748-101 / 114235 (1) D350-748-101 / 113096 (1) D350-748-101 / 113095 1 NIL

COMMENTAIRES / comments

APPROUVÉ par / Approved by: METCOR 6 **DATE: 2014-03-21**

METCOR INC.

560 BOUL. ARTHUR-SAUVÉ, ST-EUSTACHE, QC, J7R 5A8
Tél.: 450-473-1884
Télécopieur / Fax administration: 450-491-5498
Télécopieur / Fax production: 450 491-6454

Certificat de Conformité Détaillé
Detailed Certificate of Compliance

BON DE TRAVAIL order	CHARGEMENT load
194329	1

CLIENT / customer 215
DART AEROSPACE
1270 ABERDEEN
HAWKESBURY ON K6A 1K7

LIVRÉ À / shipped to: 1
DART AEROSPACE
1270 ABERDEEN
HAWKESBURY ON K6A 1K7

COMMANDE DU CLIENT customer po	BON DE LIVRAISON DU CLIENT customer shipper no.	MATÉRIEL material	CODE DE TRAITEMENT mat'l heat code	NUMÉRO DE LOT lot number
23451				

SPÉCIFICATIONS DU PROCÉDÉ
processing specifications

STRESS REL

SAE AMS 2759/1 REV.E

EXIGENCE / requirement	SPÉCIFICATIONS / specified	TESTS EXÉCUTÉS / performed	RÉSULTATS DE TESTS / results
Visual			

QUANTITÉ quantity	POIDS weight	DESCRIPTION DES PIÈCES parts description
4	120	D350-748-101 CROSSTUBE (1) D350-748-101 CROSSTUBE 113100 (1) D350-748-101 / 114235 (1) D350-748-101 / 113096 (1) D350-748-101 / 113095 1 NIL

COMMENTAIRES / comments

STRESS RELIEF 343C, 2HRS

Le traitement thermique (TT) a été fait en utilisant des équipements en conformité avec AMS2759.
Le TT a été fait tel que requis par AMS2759 et toutes les vérifications et les tests demandés ont été faites et documentés. Aucun changement n'a été faite par rapport au TT. On certifie que le matériel a été fabriqué, échantillonné, testé et inspecté en accord avec AMS2759 et le bon de commande et le matériel rencontre les exigences spécifiées.

Heat treatment (HT) was performed with equipment that meets the requirements of AMS2759.
All HT operations were in compliance with AMS2759 and all verifications have been performed and documented. No unauthorized changes were performed in regards to the HT. We certify that the material was manufactured, sampled, tested and inspected in accordance with AMS2759 and the purchase order and was found to meet the requirements.

APPROUVÉ par / Approved by: Vincent Constantino MET 18 DATE: 2014-03-21

Dart Aerospace Ltd.
1270 Aberdeen Street
Hawkesbury, ON K6A 1K7
Tel: 613 632 9577
Fax: 613 632 1053

PURCHASE ORDER

Purchase Order ID PO23451

Purchase Order Date 3/21/2014
PO Print Date 3/21/2014

Order From : VC-MET004

METCOR INC.
560 BOUL. ARTHUR SAUVE
SAINT-EUSTACHE, QC J7R 5A8
CA

Ship To : DART AEROSPACE LTD

1270 ABERDEEN
HAWKESBURY, ON K6A 1K7
CANADA

Contact Name		**Buyer**	Chantal Lavoie
Vendor Phone	450 473 1884	**Customer POID**	
		Customer Tax #	10127-2607
Ship To Contact		**Terms**	Net 30
Ship To Phone		**Currency**	CAD
Ship Via:	VENDOR'S TRUCK	**FOB**	FCA – (Free Carrier)
Ship Acct:			

3	113096	D350-748-101 CROSSTUBE	3/24/2014	1.00		$253.75	$253.
			Yes 3/24/2014				

HEAT TREAT CROSSTUBE AS PER QSI010 4.3
WITHIN 12H AFTER BENDING

Line Total: **$253.**

4	113095	D350-748-101 CROSSTUBE	3/24/2014	1.00		$275.53	$275.
			Yes 3/24/2014				

HEAT TREAT CROSSTUBE AS PER QSI010 4.3
WITHIN 12H AFTER BENDING

2014-3-24.

Line Total: **$275.**

Note:

12.04.19

CRUSHING OF D350-748-101

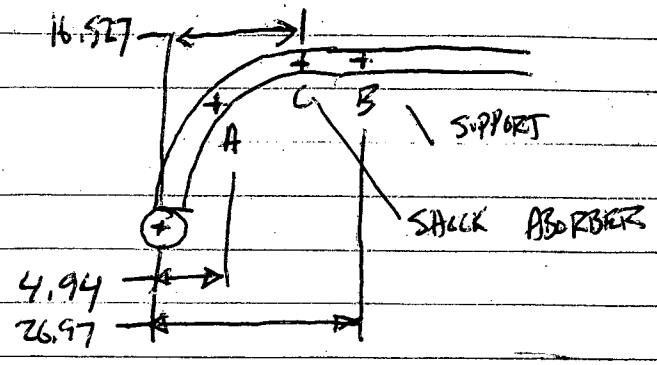

POINT A $OD_1 = 2.400$ $OD_2 = 2.044$

CRUSHING = (2.400 − 2.044)/(2.400 + 2.044) = 8%

$I = 0.361\ in^4$ (AutoCAD)

POINT B OD = 2.339 ID = 2.000

~~CRUSHING~~ $I = 0.684\ in^4$

A: $F = Mc/I = P \times 4.94 \times 2.044 / 2 \times 0.361 = 13.98\ P$

B: " $= P \times 26.97 \times 2.339 / 2 \times 0.684 = 46.11 \times P$

M.S. = 46.11/13.98 − 1 = 2.30

∴ Tube will fail at support before tube fails at area of max crushing. ∴ 8% CRUSHING IS Acceptable.

POINT C $I = 0.684\ in^4$

$F = Mc/I \Rightarrow$ ~~P × 16.527~~ $P \times 16.527 \times 2.339 / 2 \times 0.684 = 28.26 \cdot P$

MS = 28.26/13.98 − 1 = 1.02

∴ Tube will fail at shock absorber before area of max crushing ∴ 8% crushing is acceptable

CP 12.04.19

CERTIFICATE OF CONFORMANCE

CADORATH PLATING CO. LTD.
2150 LOGAN AVENUE
WINNIPEG, MANITOBA R2J-0J1

DATE: May-05-2014

CONSIGNED TO: Dart Aerospace Ltd.
1270 Aberdeen St.
Hawksbury, ON K6A 1K7

W/O #: 134848
INVOICE #: 70988

CONTRACT OR PURCHASE ORDER # PO23597

DESCRIPTION: CROSSTUBE **QTY** 1

P/N # d350-748-101 **S/N #** 113096

MPI IAW ASTM-E-1444. CADMIUM PLATING IAW AMS-QQ-P-416C TYPE 2 YELLOW CLASS 1. FINAL MPI IAW ASTM-E-1444. BAKE HEAT CHART # 14-375 AND 14-449.

S 14/05/09

CERTIFICATE: I certify that the items indicated here on have been inspected and tested and conform to all specifications and requirements detailed on the contract or purchase order.

Approved Inspector:

CAI 01

skyservice NDT Work Order

Air travel. Evolved.

Sky Service F.B.O. Inc.

DOT APP 53-89 / EASA 145.7142 / BDA AMO 385

WO #: YYZ	70269	Customer:	DART AEROSPACE	Dept:	NDT YYZ	Reference:	24178-
Make:		Model:		Reg:		A/C S/N:	
TSN:		CSN:		TSO:		Tail#:	

Task: __Scheduled __Unscheduled __A.O.G. X P.T. __M.T. __E.T. __U.T. __R.T.

Work Requried:

CARRY OUT NDT ON THE FOLLOWING D350-748-101 FWD CROSSTUBES

(1) WORK ORDER ID 112354

(2) WORK ORDER ID 113096

(3) WORK ORDER ID 114235

Action Taken:	Date:	Initial/Stamp:
LIQUID PENETRANT INSPECTION		
CARRIED OUT IAW ASTM 1417-M13 ON:		
(1) WO ID 112354 = NO CRACKS FOUND	12 MAY 2014	DOT-APP 19 53-89
(2) WO ID 113096 = NO CRACKS FOUND	12 MAY 2014	DOT-APP 19 53-89
(3) WO ID 114235 = NO CRACKS FOUND	12 MAY 2014	DOT-APP 19 53-89
PENETRANT - ARDROX 970P25E BATCH #	02312131	
BLACK LIGHT = M20189		

I certified that the maintenance described above has been performed with the applicable standard of airworthiness.

Signature:	ACA/SCA Stamp	Date:
Name: GARY SMITH	DOT-APP 19 53-89	12 MAY 2014

SKYM046-18 Rev 1 Apr/12

5.0 PARTS LIST

Qty -101	Qty -201	Part Number	Description
X		D350-748-101	**CROSSTUBE INSTALLATION, AS 350/355 HIGH FWD**
	X	D350-748-201	**CROSSTUBE INSTALLATION, AS 350/355 HIGH AFT**
1		D350-748-141	CROSSTUBE ASSEMBLY, AS 350/355 HIGH FWD
	1	D350-748-241	CROSSTUBE ASSEMBLY, AS 350/355 HIGH AFT
*2	*2	D3502-1	SUPPORT
*2	*2	D2856-400-710	ABRASION STRIP
*1	*1	AELS-1032-225	INSERT
*2	*2	MS21920-20	CLAMP
*1	*1	MS27039-1-10	SCREW
*1	*1	AN960JD10	WASHER
4	4	D3500-1	SADDLE
16	16	D3501-1	BUSHING
16	16	AN4-6A	BOLT
8	8	AN4-41A	BOLT
4	4	AN5-32A	BOLT
32	32	AN960JD416	WASHER
8	8	AN960JD516	WASHER
24	24	MS21042L4	NUT (OR MS21042-4)
4	4	MS21042L5	NUT (OR MS21042-5)

* REFERENCE ONLY. PARTS ARE INCLUDED IN D350-748-141/241 ASSEMBLIES ABOVE

• COPYRIGHT © 2006 BY DART AEROSPACE LTD •
THIS DOCUMENT IS PRIVATE AND CONFIDENTIAL AND IS SUPPLIED ON THE EXPRESS CONDITION THAT IT IS NOT TO BE USED FOR ANY PURPOSE OR COPIED OR COMMUNICATED TO ANY OTHER PERSON WITHOUT WRITTEN PERMISSION FROM DART AEROSPACE LTD.